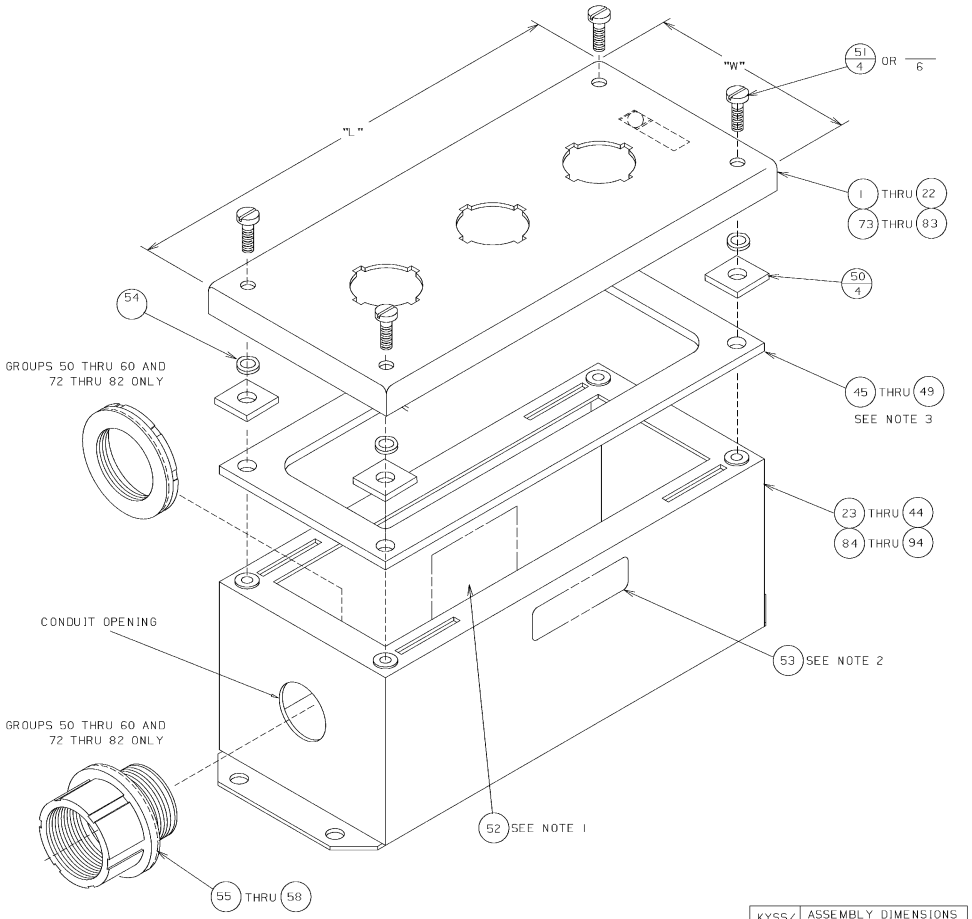

TYPICAL KYSS / KYAF • ENCLOSURE VIEW

KYSS/ KYAF	ASSEMBLY DIMENSIONS "L"	"W"	"H"
1	3.90	3.90	3.80
2	6.40	3.90	3.80
3	8.90	3.90	3.80
4	11.40	3.90	3.80
6	10.02	7.15	3.80
9	10.02	9.40	3.80
12	12.52	9.40	3.80
16	12.52	11.65	3.80
20	15.02	11.65	3.80
25	15.02	13.90	3.80
30	17.52	13.90	3.80

IT.	DESCRIPTION	PART NO.	82	81	80	79	78	77	76	75	74	73	72	71	70	69	68	67	66	65	64	63	62	61	60	59	58	57	56	55	54	53	52	51	50
1	KYSS-1 COVER	30426-453-50																																	1
2	KYSS-2 COVER	30426-453-51																																1	
3	KYSS-3 COVER	30426-453-52																															1		
4	KYSS-4 COVER	30426-453-53																														1			
5	KYSS-6 COVER	30426-453-54																													1				
6	KYSS-9 COVER	30426-453-55																												1					
7	KYSS-12 COVER	30426-453-56																											1						
8	KYSS-16 COVER	30426-453-57																										1							
9	KYSS-20 COVER	30426-453-58																									1								
10	KYSS-25 COVER	30426-453-59																								1									
11	KYSS-30 COVER	30426-453-60																							1										
12	KYAF-1 COVER	30426-453-61																						1											
13	KYAF-2 COVER	30426-453-62																					1												
14	KYAF-3 COVER	30426-453-63																				1													
15	KYAF-4 COVER	30426-453-64																			1														
16	KYAF-6 COVER	30426-453-65																		1															
17	KYAF-9 COVER	30426-453-66																	1																
18	KYAF-12 COVER	30426-453-67																1																	
19	KYAF-16 COVER	30426-453-68															1																		
20	KYAF-20 COVER	30426-453-69														1																			
21	KYAF-25 COVER	30426-453-70													1																				
22	KYAF-30 COVER	30426-453-71												1																					
23	KYSS-1 BASE	30426-454-50																																	1
24	KYSS-2 BASE	30426-454-51																																1	
25	KYSS-3 BASE	30426-454-52																															1		
26	KYSS-4 BASE	30426-454-53																														1			
27	KYSS-6 BASE	30426-454-54																													1				
28	KYSS-9 BASE	30426-454-55																												1					
29	KYSS-12 BASE	30426-454-56																											1						
30	KYSS-16 BASE	30426-454-57																										1							
31	KYSS-20 BASE	30426-454-58																									1								
32	KYSS-25 BASE	30426-454-59																								1									
33	KYSS-30 BASE	30426-454-60																							1										
34	KYAF-1 BASE	30426-454-61																						1											
35	KYAF-2 BASE	30426-454-62																					1												
36	KYAF-3 BASE	30426-454-63																				1													
37	KYAF-4 BASE	30426-454-64																			1														
38	KYAF-6 BASE	30426-454-65																		1															
39	KYAF-9 BASE	30426-454-66																	1																
40	KYAF-12 BASE	30426-454-67																1																	
41	KYAF-16 BASE	30426-454-68															1																		
42	KYAF-20 BASE	30426-454-69														1																			
43	KYAF-25 BASE	30426-454-70													1																				
44	KYAF-30 BASE	30426-454-71												1																					
45	GASKET	30464-147-01											1											1											1
46	GASKET	30464-147-02										1											1											1	
47	GASKET	30464-147-03								1												1											1		
48	GASKET	30464-147-04							1												1											1			
49	GASKET	1579-208121	4.6'	4.4'	3.9'	3.7'	3.2'	2.8'	2.3'					4.6'	4.4'	3.9'	3.7'	3.2'	2.8'	2.3'					4.6'	4.4'	3.9'	3.7'	3.2'	2.8'	2.3'				
50	CORNER GASKET	30464-150-01	4	4	4	4	4	4	4					4	4	4	4	4	4	4					4	4	4	4	4	4	4				
51	KYSS-1	KYSS30 Y35																																	
52	KYSS-2	KYSS25 Y35																																	
53	KYSS-3	KYSS20 Y35																																	
54	KYSS-4	KYSS16 Y35																																	
55	KYSS-6	KYSS12 Y35																																	
56	KYSS-9	KYSS9 Y35																																	
57	KYSS-12	KYSS6 Y35																																	
58	KYSS-16	KYSS4 Y35																																	
59	KYSS-20	KYSS3 Y35																																	
60	KYSS-25	KYSS2 Y35																																	
61	KYAF-1	KYSS1 Y35																																	
62	KYAF-2	KYAF-30																																	
63	KYAF-3	KYAF-25																																	
64	KYAF-4	KYAF-20																																	
65	KYAF-6	KYAF-16																																	
66	KYAF-9	KYAF-12																																	
67	KYAF-12	KYAF-9																																	
68	KYAF-16	KYAF-6																																	
69	KYAF-20	KYAF-4																																	
70	KYAF-25	KYAF-3																																	
71	KYAF-30	KYAF-2																																	
72	KYSS1 Y35	KYAF-1																																	
73	KYSS2 Y35	KYSS-30																																	
74	KYSS3 Y35	KYSS-25																																	
75	KYSS4 Y35	KYSS-20																																	
76	KYSS6 Y35	KYSS-16																																	
77	KYSS9 Y35	KYSS-12																																	
78	KYSS12 Y35	KYSS-9																																	
79	KYSS16 Y35	KYSS-6																																	
80	KYSS20 Y35	KYSS-4																																	
81	KYSS25 Y35	KYSS-3																																	
82	KYSS30 Y35	KYSS-2																																	
		KYSS-1																																	

ALL DIMENSIONS ARE INCHES

CRITICAL DIMENSION CODE	MILLIMETERS LINEAR TOLERANCE		INCHES LINEAR TOLERANCE	
F - FUNCTION M - MATING A - AUDIT	0 PLACE	±1.50	1 PLACE	±.060
	1 PLACE	±0.50	2 PLACE	±.020
ANGLES DIM ±1°	UNDIM 90±2°	2 PLACE	±0.15	3 PLACE ±.005
		3 PLACE	±0.05	4 PLACE ±.002

SQUARE D COMPANY
Dedicated to Growth • Committed to Quality

SUBJECT: CONTROL STATION ASSEMBLIES

CLASS 9001 TYPE KYSS/KYAF FORM SER G

PROPRIETARY DOCUMENT - PROPERTY OF SQUARE D COMPANY. NOT TO BE REPRODUCED BY ANY MEANS OR USED TO FURNISH INFORMATION TO OTHERS WITHOUT THE EXPRESS CONSENT OF SQUARE D COMPANY. ALL RIGHTS RESERVED. © 1990, SQUARE D COMPANY

ELECTRONIC ORIGINAL
CHANGES TO THIS ORIGINAL MUST BE MADE VIA THE ENGINEERING CHANGE

| | | | | | | | | | | | | | | | | | | |