Modicon TM3 guidebook
for setting up connection to HMI

SE02-Guide-TM3-EN-R06

Revision

Rev	Date	Description
Rev.00	2021-06-28	New Creation
Rev.01	2021-08-03	Add P.14 Supplied power Add P.18 HMI line terminal
Rev.02	2021-09-16	Add P.7, P38, P39, P54 Support Analog module for LT3000 Add P.24 Download TM3BC IO Configurator download destination Change of name P24-P35 TM3 Bus coupler -> TM3BC
Rev.03	2022-01-24	P.24: Add cation software update P.25~P28 Modified TM3 IO Configurator select language list
Rev.04	2022-04-21	P.24: Add notes about software links
Rev.05	2022-08-04	P.15 TM3DM24R Modified output number (6 -> 8) P.16 Change cable type (integrated line terminator) P.18 Delete cable type (Duplicate P.16 cable)
Rev.06	2023-07-18	Added “Legal Information”, “Safety Information”, “About this book”, “Cybersecurity”. Corrected information in “5.4 Analog input resolution” in P.18 Corrected information in “8.4.4 Configuration of data range” in P.41 Added STC6000 Series information (P.14, P.19, P.45-51, P.61-65)

Legal Information

The Pro-face brand and any trademarks of Schneider Electric SE and its subsidiaries referred to in this guide are the property of Schneider Electric SE or its subsidiaries. All other brands may be trademarks of their respective owners.

This guide and its content are protected under applicable copyright laws and furnished for informational use only. No part of this guide may be reproduced or transmitted in any form or by any means (electronic, mechanical, photocopying, recording, or otherwise), for any purpose, without the prior written permission of Schneider Electric.

Schneider Electric does not grant any right or license for commercial use of the guide or its content, except for a non-exclusive and personal license to consult it on an "as is" basis. Schneider Electric products and equipment should be installed, operated, serviced, and maintained only by qualified personnel.

As standards, specifications, and designs change from time to time, information contained in this guide may be subject to change without notice.

To the extent permitted by applicable law, no responsibility or liability is assumed by Schneider Electric and its subsidiaries for any errors or omissions in the informational content of this material or consequences arising out of or resulting from the use of the information contained herein.

As part of a group of responsible, inclusive companies, we are updating our communications that contain non-inclusive terminology. Until we complete this process, however, our content may still contain standardized industry terms that may be deemed inappropriate by our customers.

Table of contents

1 Safety Information 8

1.1 Important Information 8

2 About this book 9

2.1 Document Scope 9
2.2 Validity Note 9
2.3 Registered Trademarks 9
2.4 Related Documents 9
2.5 Product Related Information 9

3 Cybersecurity 13

3.1 Cybersecurity Guideline 13

4 Preface 14

4.1 Overview 14
4.1.1 For user with a replacement from EX module to TM3 module, refer to Chapter 5 at first. 14
4.1.2 For user with TM3 module as remote I/O (CANopen), refer to Chapter 6-8. 14
4.1.3 For user with TM3 module connected to the rear of LT3000/STC6000, refer to Chapter 9. 14
4.1.4 For each TM3 module hardware specification, refer to Chapter 10. 14

5 Precautions for replacing the EX module with the TM module 15

5.1 EX module and TM3 product model comparison 15
5.2 Sample duration time 16
5.3 New features installed on TM3 17
5.4 Analog input resolution 18
5.5 Replacement procedure 19
5.5.1 Workflow 19
5.5.2 Preparation 20
5.6 Other limitations 21

6 Specification comparison CANopen Unit 22

6.1 TM3BCCO Specification 22
6.1.1 Dimensions 22
6.2 Specification comparison between HTB unit and TM3BCCO Unit 23
6.2.1 Function difference 23

6.2.2 Configuration difference 23
6.3 Cable for TM3BCCO 24
6.3.1 Communication cable 24
6.3.2 CANopen line terminal 26

7 TM3 Module for CANopen connection 27

7.1 Connection 27
7.2 Connectable TM3 modules to TM3BCCO（CANopen） 27
7.3 Function difference between EXM and TM3 when connecting to CANopen 28
7.3.1 Specification Comparison of “EXM-AMI2HT” and “TM3AI2H / TM3AI2HG” 28
7.3.2 Specification Comparison of “EXM-ALM3LT” and “TM3TM3 / TM3TM3G” 28
7.3.3 Specification Comparison of “EXM-AMM3HT” and “TM3TM3 / TM3TM3G” 29
7.3.4 Specification Comparison of “EXM-AMO1HT” and “TM3AQ2 / TM3AQ2G” 29
7.3.5 Specification Comparison of “EXM-AMI4LT” and “TM3TI4 / TM3TI4G” 30
7.3.6 Specification Comparison of “EXM-AVO2HT” and “TM3AQ2 / TM3AQ2G” 30
7.3.7 Specification Comparison of “EXM-AMM6HT” and “TM3AM6 / TM3AM6G” 31
7.3.8 Specification Comparison of “EXM-ARI8LT” and “TM3TI4 / TM3TI4G” 31

8 TM3BC IO Configurator 32

8.1 Overview 32
8.2 Download 32
8.3 Installation Instructions 32
8.3.1 About installation 32
8.3.2 Installation Procedure 33
8.4 TM3BC IO Configurator Operation Procedure 37
8.4.1 Main Screen 37
8.4.2 Create New Project 38
8.4.3 Add new devices 39
8.4.4 Configuration of data range 41
8.4.5 Data Export 42
8.4.6 Data Import 43
8.5 Limitations 44

9 About the modules mounted on the rear side of LT3000/STC6000 45

9.1 Installation Procedure 45
9.1.1 When connecting to LT3000 45
9.1.2 When connecting to STC6000 46
9.2 System configuration 48

9.3 Rear connectable TM3 Module 49
9.4 Function difference (when mount on the rear of LT3000/STC6000) 50
9.4.1 Specification Comparison of “EXM-AMI2HT” and “TM3AI2H / TM3AI2HG” 50
9.4.2 Specification Comparison of “EXM-ALM3LT” and “TM3TM3 / TM3TM3G” 50
9.4.3 Specification Comparison of “EXM-AMM3HT” and “TM3TM3 /TM3TM3G “ 50
9.4.4 Specification Comparison of “EXM-AMO1HT” and “TM3AQ2 / TM2AQ2G” 50
9.4.5 Specification Comparison of “EXM-AMI4LT” and “TM3TI4 / TM3TI4G” 50
9.4.6 Specification Comparison of “EXM-AVO2HT and “TM3AQ2 / TM3AQ2G” 51
9.4.7 Specification Comparison of “EXM-AMM6HT” and “TM3AM6 / TM3AM6G” 51
9.4.8 Specification Comparison of “EXM-ARI8LT” and “TM3TI4 / TM3TI4G” 51
9.5 DIO module 52
9.5.1 Specification Comparison of “TM3DI8” and “EXM-DDI8T” 52
9.5.2 Specification Comparison of “TM3DI16” and “EXM-DDI16DT” 53
9.5.3 Specification Comparison of “TM3DQ8R” and “EXM-DRA8RT” 54
9.5.4 Specification Comparison of “TM3DQ8T” and “EXM-DDO8TT 55
9.5.5 Specification Comparison of “TM3DQ8U” and “EXM-DDO8UT 56
9.5.6 Specification Comparison of “TM3DQ16TK” and “EXM-DDO16TK 57
9.5.7 Specification Comparison of “TM3DQ16UK” and “EXM-DDO16UK 58
9.5.8 Specification Comparison of “TM3DM8R” and “EXM-DMM8DRT 59
9.5.9 Specification Comparison of “TM3DM24R” and “EXM-DMM24DRT 60
9.6 Configuration when mounting on the rear of LT3000/STC6000 series 61
9.6.1 Module setting method 61
9.6.2 Number of connectable modules on the rear of LT3000/STC6000 series 64
9.6.3 In case of connecting 3 units of TM3 / EX modules with STC6000 Series 65

10 TM3 Module Specification 66

10.1 Overview 66
10.2 General Specification 67
10.2.1 Electrical specifications 67
10.2.2 Environmental Characteristics 69
10.2.3 TWDFCW** Cable 70
10.3 DIO Input module 72
10.3.1 TM3DI8 / TMDI8G, TM3DI16 / TM3DI16G 72
10.4 DIO Output Module 74
10.4.1 TM3DQ8R / TM3DQ8RG, TM3DQ16R / TM3DQ16RG 74
10.4.2 TM3DQ8U / TM3DQ8UG 78
10.4.3 TM3DQ8T / TM3DQ8TG 80
10.4.4 TM3DQ16TK 82

１０.４.５ TM3DQ16UK 84
１０.５ DIO Input/Output Mixed module 86
１０.５.１ TM3DM8R / TM3DM8RG 86
１０.５.２ TM3DM24R / TM3DM24RG 90
１０.６ TM3 Analog Module 94
１０.６.１ TM3AI2H / TM3AI2HG 94
１０.６.２ TM3TI4 / TM3TI4G 97
１０.６.３ TM3AQ2 / TM2AQ2G 102
１０.６.４ TM3TM3 / TM3TM3G 105
１０.６.５ TM3AM6 /TM3AM6G 111

1 Safety Information

1.1 Important Information

Read these instructions carefully and look at the equipment to become familiar with the device before trying to install, operate, service, or maintain it. The following special messages may appear throughout this documentation or on the equipment to warn of potential hazards or to call attention to information that clarifies or simplifies a procedure.

The addition of this symbol to a “Danger” or “Warning” safety label indicates that an electrical hazard exists which will result in personal injury if the instructions are not followed.

This is the safety alert symbol. It is used to alert you to potential personal injury hazards. Obey all safety messages that follow this symbol to avoid possible injury or death.

DANGER

DANGER indicates a hazardous situation which, if not avoided, **will result in** death or serious injury.

WARNING

WARNING indicates a hazardous situation which, if not avoided, **could result in** death or serious injury.

CAUTION

CAUTION indicates a hazardous situation which, if not avoided, **could result** in minor or moderate injury.

NOTICE

NOTICE is used to address practices not related to physical injury.

PLEASE NOTE

Electrical equipment should be installed, operated, serviced, and maintained only by qualified personnel. No responsibility is assumed by Schneider Electric for any consequences arising out of the use of this material.
A qualified person is one who has skills and knowledge related to the construction and operation of electrical equipment and its installation and has received safety training to recognize and avoid the hazards involved.

2 About this book

2.1 Document Scope

This guidebook describes how to use the Modicon TM3 I/O expansion module (hereinafter referred to as TM3) with HMI.

2.2 Validity Note

This documentation is valid for this product.

The technical characteristics of the device(s) described in the present manual also appear online at www.pro-face.com.

The characteristics that are described in the present document should be the same as those characteristics that appear online. In line with our policy of constant improvement, we may revise content over time to improve clarity and accuracy. If you see a difference between the document and online information, use the online information as your reference.

2.3 Registered Trademarks

Product names used in this manual may be the registered trademarks owned by the respective proprietors.

2.4 Related Documents

You can download the manuals related to this product, such as hardware manual for respective HMI, from our website. https://www.proface.com/en/download/search

2.5 Product Related Information

If the equipment is used in a manner not specified by the manufacturer, the protection provided by the equipment may be impaired.

⚠⚠DANGER

HAZARD OF ELECTRIC SHOCK, EXPLOSION, OR ARC FLASH

- Remove all power from the device before removing any covers or elements of the system, and prior to installing or removing any accessories, hardware, or cables.
- Unplug the power cable from both this product and the power supply prior to installing or removing the product.
- Always use a properly rated voltage sensing device to confirm power is off where and when indicated.
- Replace and secure all covers or elements of the system before applying power to this product.
- Use only the specified voltage when operating this product. This product is designed to use 24 Vdc. Always check whether your device is DC powered before applying power.
- When using this product in Class I, Division 2, Groups A, B, C, and D hazardous locations, install this product in an enclosure that prevents the operator from touching the back of this product without the use of tools.

Failure to follow these instructions will result in death or serious injury.

Critical alarm indicators and system functions require independent and redundant protection hardware and/or mechanical interlocks.

When you cycle power, wait at least 10 seconds after it has been turned off. If this product is restarted too quickly, it may not operate correctly.

In the event the screen cannot be properly read, for example, if the backlight is not functioning, it may be difficult or impossible to identify a function. Functions that may present a hazard if not immediately executed, such as a fuel shut-off, must be provided independently of this product. The machine's control system design must take into account the possibility of the backlight no longer functioning and the operator being unable to control the machine or making mistakes in the control of the machine.

⚠WARNING

LOSS OF CONTROL

- The designer of any control scheme must consider the potential failure modes of control paths and, for certain critical control functions, provide a means to achieve a safe state during and after a path failure. Examples of critical control functions are emergency stop and overtravel stop, power outage and restart.
- Separate or redundant control paths must be provided for critical control functions.
- System control paths may include communication links. Consideration must be given to the implications of unanticipated transmission delays or failures of the link.
- Observe all accident prevention regulations and local safety guidelines.
- Each implementation of this product must be individually and thoroughly tested for proper operation before being placed into service.
- The machine control system design must take into account the possibility of the backlight no longer functioning and the operator being unable to control the machine, or making errors in the control of the machine.

Failure to follow these instructions can result in death, serious injury, or equipment damage.

For additional information, refer to NEMA ICS 1.1 (latest edition), "Safety Guidelines for the Application, Installation, and Maintenance of Solid State Control" and to NEMA ICS 7.1 (latest edition), "Safety Standards for Construction and Guide for Selection, Installation and Operation of Adjustable-Speed Drive Systems" or their equivalent governing your particular location.

⚠WARNING

UNINTENDED EQUIPMENT OPERATION

- The application of this product requires expertise in the design and programming of control systems. Only persons with such expertise should be allowed to program, install, alter, and apply this product.
- Follow all applicable safety standard, local regulations and directives.

Failure to follow these instructions can result in death, serious injury, or equipment damage.

⚠WARNING

UNINTENDED EQUIPMENT OPERATION

- Do not use this product as the only means of control for critical system functions such as motor start/stop or power control.
- Do not use this equipment as the only notification device for critical alarms, such as device overheating or overcurrent.
- Use only the software provided with this product. If you use other software, please confirm the operation and safety before use.

Failure to follow these instructions can result in death, serious injury, or equipment damage.

The following characteristics are specific to the LCD panel and are considered normal behavior:

- LCD screen may show unevenness in the brightness of certain images or may appear different when seen from outside the specified viewing angle. Extended shadows, or crosstalk may also appear on the sides of screen images.
- LCD screen pixels may contain black and white colored spots and color display may seem to have changed.
- When experiencing vibrations within a certain frequency range and vibration acceleration is above what is acceptable, the LCD screen may partially turn white. Once the vibration condition ends, the whitening of the screen is resolved.
- When the same image is displayed on the screen for a long period, an afterimage may appear when the image is changed.
- The panel brightness may decrease when used for a long time in an environment continuously filled with inert gas. To prevent deterioration of panel brightness, regularly ventilate the panel. For more information, please contact customer support.
  https://www.pro-face.com/trans/en/manual/1015.html

⚠ WARNING

SERIOUS EYE AND SKIN INJURY

The liquid in the LCD panel contains an irritant:

- Avoid direct skin contact with the liquid.
- Wear gloves when you handle a broken or leaking unit.
- Do not use sharp objects or tools in the vicinity of the LCD panel.
- Handle the LCD panel carefully to prevent puncture, bursting, or cracking of the panel material.
- If the panel is damaged and any liquid comes in contact with your skin, immediately rinse the area with running water for at least 15 minutes. If the liquid gets in your eyes, immediately rinse your eyes with running water for at least 15 minutes and consult a doctor.

Failure to follow these instructions can result in death, serious injury, or equipment damage.

NOTICE

REDUCTION OF SERVICE LIFE OF PANEL

Change the screen image periodically and try not to display the same image for a long period of time.

Failure to follow these instructions can result in equipment damage.

3 Cybersecurity

3.1 Cybersecurity Guideline

Use this product inside a secure industrial automation and control system. Total protection of components (equipment/devices), systems, organizations, and networks from cyber attack threats requires multi-layered cyber risk mitigation measures, early detection of incidents, and appropriate response and recovery plans when incidents occur. For more information about cybersecurity, refer to the Pro-face HMI/IPC Cybersecurity Guide.
https://www.proface.com/en/download/manual/cybersecurity_guide

⚠ WARNING

POTENTIAL COMPROMISE OF SYSTEM AVAILABILITY, INTEGRITY, AND CONFIDENTIALITY

- Change default passwords at first use to help prevent unauthorized access to device settings, controls and information.
- Disable unused ports/services and default accounts, where possible, to minimize pathways for malicious attacks.
- Place networked devices behind multiple layers of cyber defenses (such as firewalls, network segmentation, and network intrusion detection and protection).
- Apply the latest updates and hotfixes to your Operating System and software.
- Use cybersecurity best practices (for example: least privilege, separation of duties) to help prevent unauthorized exposure, loss, modification of data and logs, interruption of services, or unintended operation.

Failure to follow these instructions can result in death, serious injury, or equipment damage.

4 Preface

4.1 Overview

This guidebook describes how to use the TM3 module with HMI. In addition, the replacement method, precautions, restrictions, etc. when replacing from EX module to TM3 module are described.

4.1.1 For user with a replacement from EX module to TM3 module, refer to Chapter 5 at first.

4.1.2 For user with TM3 module as remote I/O (CANopen), refer to Chapter 6-8.

Note: Remote I/O (CANopen) for STC6000 Series is planned to be supported.

4.1.3 For user with TM3 module connected to the rear of LT3000/STC6000, refer to Chapter 9.

4.1.4 For each TM3 module hardware specification, refer to Chapter 10.

5 Precautions for replacing the EX module with the TM module

5.1 EX module and TM3 product model comparison

Type	EX Module *2	TM3 Module		
		Connector Type (Screw Type)	Connector Type (Spring Type)	Connector Type (HE10)
Input Module	EXM-DDI8DT	TM3DI8	TM3DI8G	-
	EXM-DDI16DT	TM3DI16	TM3DI16G	-
Output Module	EXM-DDO8TT	TM3DQ8T	TM3DQ8TG	-
	EXM-DDO8UT	TM3DQ8U	TM3DQ8UG	-
	EXM-DRA8RT	TM3DQ8R	TM3DQ8RG	-
	EXM-DRA16RT	TM3DQ16R	TM3DQ16RG	-
	EXM-DDO16TK	-	-	TM3DQ16TK
	EXM-DDO16UK	-	-	TM3DQ16UK
Input/Output Mixed Module	EXM-DMM8DRT	TM3DM8R	TM3DM8RG	-
	EXM-DMM24DRF	TM3DM24R	TM3DM24RG	-
Analog Module *1	EXM-AMI2HT	TM3AI2H	TM3AI2HG	-
	EXM-AMO1HT	TM3AQ2	TM3AQ2G	-
	EXM-AVO2HT			-
	EXM-AMI4LT	TM3TI4	TM3TI4G	-
	EXM-ARI8LT	TM3TI4（x2）	TM3TI4G（x2）	-
	EXM-AMM6HT	TM3AM6	TM3AM6G	-
	EXM-AMM3HT	TM3TM3	TM3TM3G	-
	EXM-ALM3LT			-

*1 TM3 analog modules are supported by GP-Pro EX V4.09.350 or later version.

The TM3 modules other than the analog modules are supported by GP-Pro EX V4.09.250 or later.

*2 The connector type of EX modules is a screw type connector except for the following three models.

- EXM-DDO16TK：MIL Connector
- EXM-DDO16UK：MIL Connector
- EXM-DMM24DRF：Terminal block

5.2 Sample duration time

The sampling time differs between EX module and TM3 module.

Be careful when using TM3 module as a replacement from EM module.

Especially for models with a longer sampling interval than EX module, check the specifications before use.

EX module	TM3 Module	Detail
EXM-ALM3LT	TM3TM3	
Thermocouple: 20ms max. Temperature Probes: 20ms max. for revision of PV:03 RL:07 SV:1.2 40ms max. for revision of PV:04 RL:08 SV:2.0	10ms or 100ms	TM3 is little slower than EX Module. Can be set to 10ms by TM3BC IO configurator setting. *Please check the operation before actual operation.
EXM-AMM3HT	TM3TM3	
20ms max.	10ms or 100ms	TM3 is little slower than EX Module. Can be set to 10ms by TM3BC IO configurator setting. *Please check the operation before actual operation.
EXM-AMI2HT	TM3AI2H	
20ms max.	1ms	TM3 is faster than EX Module. It is not critical difference
EXM-AMI4LT	TM3TI4	
160ms	10ms or 100ms (Voltage/Current) 100ms (Thermocouple/RTD)	TM3 is faster than EX Module. It is not critical difference
EXM-AMM6HT	TM3AM6	
64ms max.	1ms or 10ms	TM3 is faster than EX Module. It is not critical difference
EXM-ARI8LT	TM3TI4	
320ms per channel	100ms	TM3 is faster than EX Module. It is not critical difference

5.3 New features installed on TM3

New features installed on TM3 are not currently supported. The functions supported by EX module are available.

Not available function	Notes
Expander Connection	This is a new function for connecting multiple TM3BCCO units. GP-Pro EX cannot be used.
Web Server Connection	This is a new function of TM3BCCO. GP-Pro EX cannot be used.
No support unit by HTB	The unsupported TM3 modules listed in this guidebook. GP-Pro EX cannot be used.
HTB Special I/O Function	Supported by HTB unit, not supported by TM3BCCO. GP-Pro EX cannot be used.
Error behavior Object	Supported by HTB unit, not supported by TM3BCCO. GP-Pro EX cannot be used.
Polarity setting object for 8bit DIO	Supported by HTB unit, not supported by TM3BCCO. GP-Pro EX cannot be used.
InterruptMask object of DIO	Supported by HTB unit, not supported by TM3BCCO. GP-Pro EX cannot be used.
Optional module Setting	This is a new function of TM3BCCO. GP-Pro EX cannot be used.
Functional Mode Setting	This is a new function of TM3BCCO. GP-Pro EX cannot be used.
Fallback output function	Supported by HTB unit, not supported by TM3BCCO. GP-Pro EX cannot be used.
DIN Latch Setting	This is a new function of TM3 digital input module. TM3BC IO Configurator has settings, but GP-Pro EX cannot be used.
DIN Filter Setting	This is a new function of TM3 digital input module. TM3BC IO Configurator has settings, but GP-Pro EX cannot be used.
AIN Filter Setting	This is a new function of TM3 analog input module. TM3BC IO Configurator has settings, but GP-Pro EX cannot be used.
F/W update function for each module	The function supported by the EX module, but each module of TM3 is not supported.

5.4 Analog input resolution

IMPORTANT: Please note the following when replacing EX module with TM3 module.

The data range when used with voltage and current differs depending on the difference in resolution between the EX analog module and the TM3 analog module. The applicable cases are shown below.

EXM	Configuration	Data Range	TM3	Configuration	Data Range
EXM-AMI2HT	Fixed	0 ... 4095	TM3-AI2H	Fixed	0 ... 65535 *1
	User Setting	-32768 ... 32767		User Setting	-32768 ... 32767
EXM-AMM3HT	Fixed	0 ... 4095	TM3-TM3	Fixed	0 ... 65535 *1
	User Setting	-32768 ... 32767		User Setting	-32768 ... 32767
EXM-AMI4LT	Fixed	0 ... 4095	TM3-TI4	Fixed	0 ... 65535 *1
	User Setting	-32768 ... 32767		User Setting	-32768 ... 32767

*1 Function difference items

The TM3 module can be used in the same way as the EX module by specifying the same data range as the EX module in the user settings. If [Fixed] is selected for the EX module setting in GP-Pro EX as shown below, specify the data range when setting the TM3 module.

Example :

GP-Pro EX EXM Driver configuration

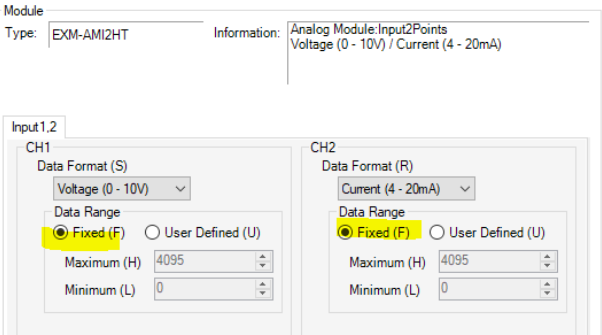

TM3 Setting

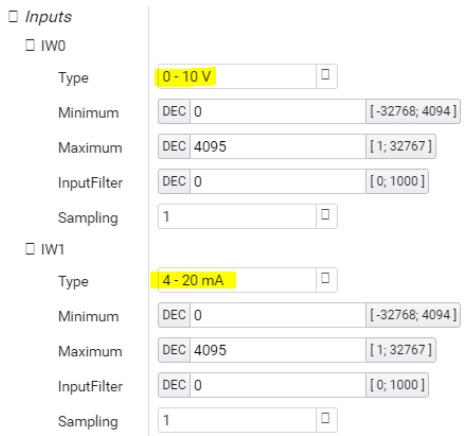

Refer to Chapter 8. TM3BC IO Configurator for TM3 module detail settings.

5.5 Replacement procedure

5.5.1 Workflow

For user with the TM3 module as remote I/O (CANopen), refer to Chapter 6-8.

For user with the TM3 module mounted on the rear of LT3000/STC6000, refer to Chapter 9.

Check the compatibility of TM3 modules and the restrictions and settings changes in this guidebook.

↓

Modify the project data.
If there is no existing data, please correct it after receiving the project

↓

Set the contents of the project data from the EX module to the TM3 module configuration.

LT3000/STC6000 rear mounting → Refer to Chapter 9

CANopen → Refer to Chapter 6-8

↓

Connect the module. Connect the module combination as configured with the project data.

LT3000/STC6000 rear mounting → rear mounting

CANopen → TM3BC IO Configurator is used for combination connection.

↓

Perform error check with GP-Pro EX to make it error-free.
If there are no errors, transfer the project data to the display.

↓

Check the operation of the module. Check the operation of each module to see if it works properly.

LT3000/STC6000 rear mounting → I/O module operation check

CANopen → Confirmation of CANopen communication cable

Confirmation of CANopen communication settings

Check the operation of the I/O module

5.5.2 Preparation

The following environment is required to send and receive project data with GP-Pro EX.

Requirements for receiving screen data	PC in which GP-Pro EX Transfer Tool is installed. *1
	USB Transfer Cable (model: CA3-USBCB-01) * Possible to send/receive a screen via a CF card, a USB storage device or Ethernet.
Requirements for converting screen data	Software Environment Computer with the following software installed. *2 ● GP-Pro EX Ver.4.09.250 or later (Ver.4.09.500 or later for STC6000) ● TM3BC IO Configurator Hardware Environment ● HMI (Case1) CANopen Connection (LT4000 Series, SP5B10+SP5000 series) *3 ● TM3BCCO, TM3 module ● Communication cable ➢ TCSCCN4F3M1T, TCSCCN4F3M3T, Self-made ● CANopen line terminator ➢ TCSCAR013M120, Self-made (Case2) Mount on the rear of LT3000/STC6000 ● LT3000/STC6000 series, TM3 module
	Transfer Cable (The following three types of cables are available) ・ A USB transfer cable (model: CA3-USBCB-01) ・ A USB data-transfer cable (model: ZC9USCBMB1) ・ A commercial USB cable (USB Type A/mini B) * Possible to send/receive a screen via a SD card, a USB storage device or Ethernet. CANopen <-> RJ45 Communication cable

*1 Please use the same version or later as or than that of the software used during creating screens.

If you don't know the version, we recommend you to use the newest version.

(http://www.pro-face.com/otasuke/download/freesoft/gpproex_transfer.htm)

For the newest version, you can download the transfer tool from our web site called [OtasukePro!]

*2 TM3 modules are supported by GP-Pro EX V4.09.250 or later.

*3 CANopen on STC6000 Series is planned to be supported.

5.6 Other limitations

The limitations are shown below.

	Description	Notes
1	Be sure to restart the HMI or TM3BCCO before changing the logic mode from STOP to RUN.	The logic change will be reflected after rebooting.
2	Be sure to restart the TM3BCCO after changing the polarity input settings.	The input polarity is reflected after restarting.

6 Specification comparison CANopen Unit

6.1 TM3BCCO Specification

6.1.1 Dimensions

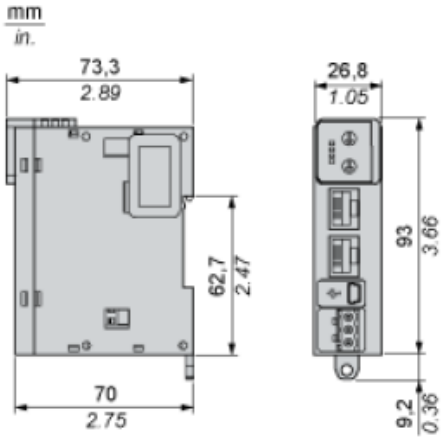

Item	Value
Communication port protocol	CANopen
Connector type	RJ45 2 CANopen daisy chain isolated / USB device port Mini-B
Transmission rate	20 kbit/s...1 Mbit/s
Topology	Daisy chain
Communication network type	CANopen
Communication service	CANopen slave device profile
Web services	Web server, USB
Current consumption	0.8 A at 24 V DC internal supply maximum 7 expansion modules
Local signaling	1 LED green/red for PWR (System Status) 1 LED green/red for RUN (Run) 1 LED green/red for ERR (Error) 1 LED green/red for I/O status
Connector insertion/removal durability	Over 100 times
Supplied power available for connected inputs and outputs modules. Current draw on 5 Vdc and 24 Vdc internal bus	600mA max.

6.2 Specification comparison between HTB unit and TM3BCCO Unit

6.2.1 Function difference

Refer to New feature of TM3 module

6.2.2 Configuration difference

<table>
<tr><th></th><th>HTB Unit</th><th>TM3BCCO (TM3 BC CANopen) + TM3 *1</th></tr>
<tr><td>System</td><td> 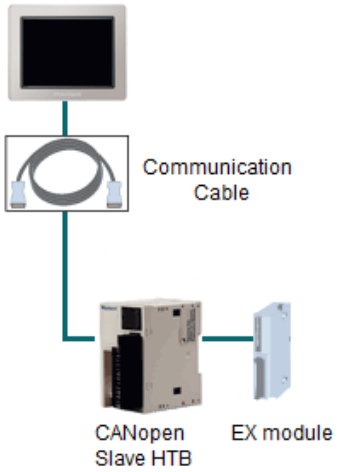
</td><td> 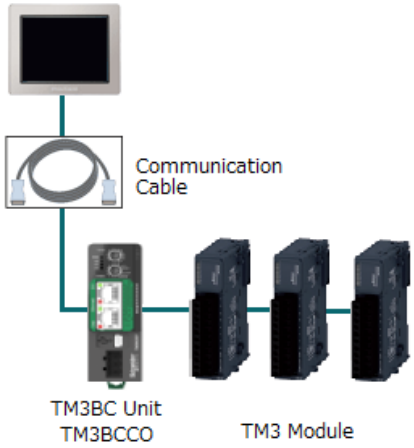
</td></tr>
<tr><td>Cable</td><td>Cable (User-self-made)</td><td>Cable (User-self-made)</td></tr>
<tr><td>IO Unit</td><td>HTB unit (HTB1C0DM9LP)
Internal I/O
<table>
<tr><td>Input</td><td>12-ch
(DC24V, Sink/Source)</td></tr>
<tr><td>Output</td><td>6-ch (DC24V)</td></tr>
<tr><td>Transistor Output</td><td>2-ch (Source, DC24V)</td></tr>
</table></td><td>TM3BC CANopen (TM3BCCO)
In the case of replacing the built-in I / O of HTB, it is necessary to prepare the following units.
<table>
<tr><td>TM3DM24R
(Input/ Relay Output)</td><td>Input：16-ch *2
(DC24V, Sink-Source)
Output：8-ch *2
(DC24V, Relay Output)</td></tr>
<tr><td>TM3DQ8T
(Transistor Output)</td><td>Output：8-ch *2
(Source, DC24V)</td></tr>
</table></td></tr>
</table>

*1 If you want to use the built-in IO unit, you need a new TM3 unit.

*2 Use I/O when using the HTB Unit, this is the number of I/O points that need to be added.

6.3 Cable for TM3BCCO

This chapter shows the pin assignment of the communication cable between TM3BCCO and the display.

* Since the connector shape is different from the conventional HTB unit, the conventional cable cannot be used.

6.3.1 Communication cable

VW3M3805R030 (CANopen cable - 1 x RJ45)

A line resistor is built into the D-sub 9pin side.

VW3M3805R030		
	Range of product	CANopen
	Electrical connection	2
	Product or component type	CANopen preassembled cable
	Connector type	1 RJ45 1 female SUB-D 9
	Cable length*1	3m
	Others	Switch to turn the terminating resistor on and off on the D-Sub 9 pin side.

*1 Cable Length 1m：VW3M3805R010

Pin Assignment

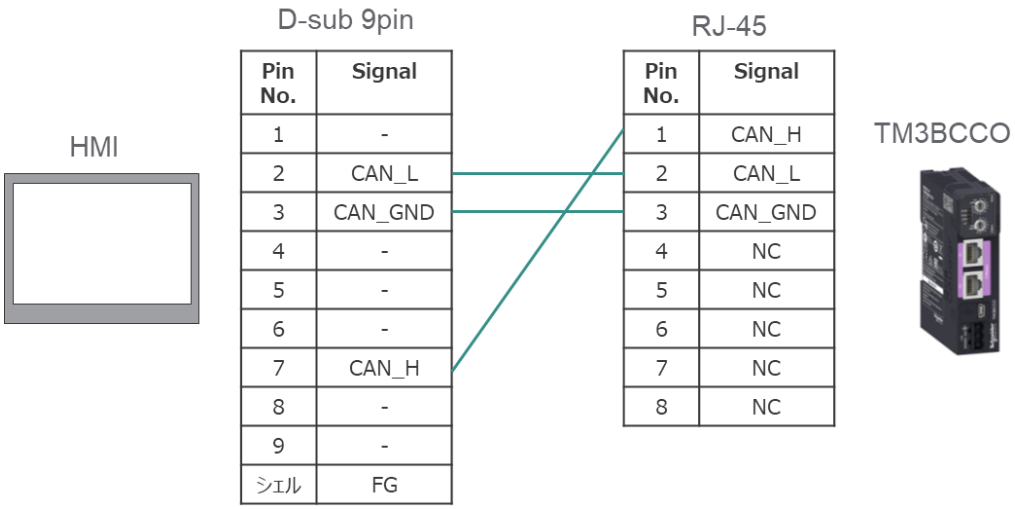

CANopen Interface (Display side)

Pin connection		Signal	Description
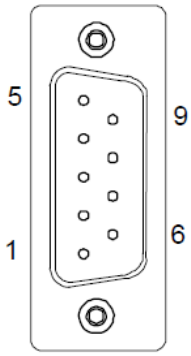 (CANopen Master Unit Main)	1	-	
	2	CAN_L	CAN_L BUS Line
	3	CAN_GND	CAN GRAND
	4	-	
	5	-	
	6	-	
	7	CAN_H	CAN_L BUS LINE
	8	-	
	9	-	
	Shell	FG	Frame Ground (SG Common)

RJ45 Interface (TM3BCCO side)

Pin connection		Signal	Description
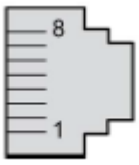	1	CAN_H	CAN_H bus line (High)
	2	CAN_L	CAN_L bus line (Low)
	3	CAN_GND	CAN 0 Vdc
	4	N.C.	No Connection
	5	N.C.	No Connection
	6	N.C.	No Connection
	7	N.C.	No Connection
	8	N.C.	No Connection

6.3.2 CANopen line terminal

The terminating resistor is required at both ends of each node.

TCSCAR013M120		
	Range of product	CANopen
	Electrical connection	1
	Product or component type	CANopen line terminator
	Connector type	RJ45

7 TM3 Module for CANopen connection

7.1 Connection

(Important Point)

・When using TM3 Module on CANopen, it is necessary to use CANopen communication unit (TM3BCCO).

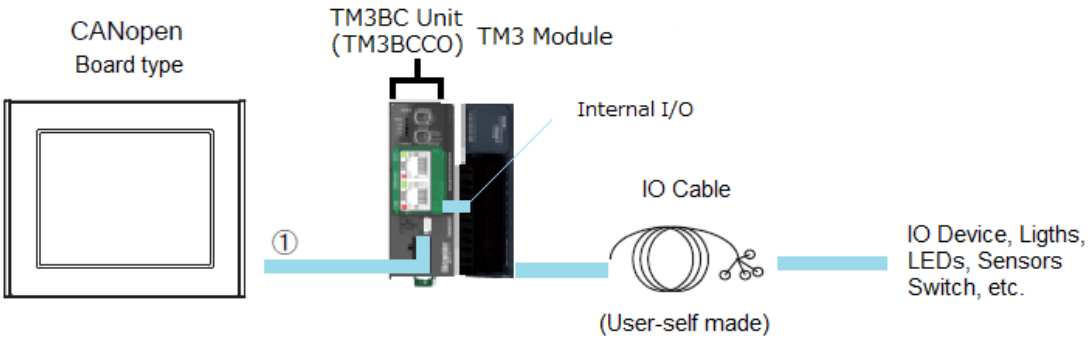

7.2 Connectable TM3 modules to TM3BCCO（CANopen）

Type	TM3		
	Screw type	Spring type	HE10
Input Module	TM3DI8	TM3DI8G	-
	TM3DI16	TM3DI16G	-
Output Module	TM3DQ8T	TM3DQ8TG	-
	TM3DQ8U	TM3DQ8UG	-
	TM3DQ8R	TM3DQ8RG	-
	-	-	TM3DQ16TK
	-	-	TM3DQ16UK
	TM3DQ16R	TM3DQ16RG	-
Input Output mixed Module	TM3DM8R	TM3DM8RG	-
	TM3DM24R	TM3DM24G	-
Analog Module	TM3AI2H	TM3AI2HG	-
	TM3AQ2	TM3AQ2G	-
	TM3TI4	TM3TI4G	-
	TM3AM6	TM3AM6G	-
	TM3TM3	TM3TM3G	-

7.3 Function difference between EXM and TM3 when connecting to CANopen

Only some of the TM3 functions can be used with GP-Pro EX. The restrictions are described per each module below.

7.3.1 Specification Comparison of "EXM-AMI2HT" and "TM3AI2H / TM3AI2HG"

Function	EXM-AMI2HT	TM3AI2H(Screw)/ TM3AI2HG (Spring)
Channel	Input 2-point	Input 2-point
Input Voltage	DC 0 to 10V	DC 0 to 10V, (DC -10 to 10V *1)
Input Current	DC 4 to 20mA	DC 4 to 20mA, (DC 0 to 20mA *1)

*1 This function and settings are not supported by GP-Pro EX.

7.3.2 Specification Comparison of "EXM-ALM3LT" and "TM3TM3 / TM3TM3G"

Function	EXM-ALM3LT	TM3TM3 (Screw) / TM3TM3G (Spring)
Channel	Input 2-point, Output 1-point	Input 2-point, Output 1-point
Input Voltage	-	DC 0 to 10V *2, (DC -10 to 10V *1)
Input Current	-	DC 4 to 20mA *2, (DC 0 to 20mA *1)
Thermocouple Type K	0 to 1300 °C	-200 to 1300 °C *2
Thermocouple Type J	0 to 1200 °C	-200 to 1000 °C *2
Thermocouple Type T	0 to 400 °C	-200 to 400 °C *2
Thermocouple Type R	-	0 to 1760 °C *1
Thermocouple Type S	-	0 to 1760 °C *1
Thermocouple Type B	-	0 to 1820 °C *1
Thermocouple Type N	-	200 to 1300 °C *1
Thermocouple Type E	-	-200 to 800 °C *1
Thermocouple Type C	-	0 to 2315 °C *1
Temperature PT100	-100 to 500 °C	-200 to 850 °C *2
Temperature PT1000	-	-200 to 600 °C *2
Temperature Ni100/Ni1000	-	-60 to 180 °C *2
Output Voltage	DC 0 to 10V	DC 0 to 10V, (DC -10 to 10V *1)
Output Current	DC 4 to 20mA	DC 4 to 20mA, (DC 0 to 20mA *1)

*1 This function and settings are not supported by GP-Pro EX.

*2 Function difference item

7.3.3 Specification Comparison of “EXM-AMM3HT” and “TM3TM3 / TM3TM3G”

Function	EXM-AMM3HT	TM3TM3 (Screw) / TM3TM3G (Spring)
Channel	Input 2-point, Output 1-point	Input 2-point, Output 1-point
Input Voltage	DC 0 to 10V	DC 0 to 10V, (DC -10 to 10V *1)
Input Current	DC 4 to 20mA	DC 4 to 20mA, (DC 0 to 20mA *1)
Thermocouple Type K	-	-200 to 1300 °C *1
Thermocouple Type J	-	-200 to 1000 °C *1
Thermocouple Type T	-	-200 to 400 °C *1
Thermocouple Type R	-	0 to 1760 °C *1
Thermocouple Type S	-	0 to 1760 °C *1
Thermocouple Type B	-	0 to 1820 °C *1
Thermocouple Type N	-	200 to 1300 °C *1
Thermocouple Type E	-	-200 to 800 °C *1
Thermocouple Type C	-	0 to 2315 °C *1
Temperature PT100	-	-200 to 850 °C *1
Temperature PT1000	-	-200 to 600 °C *1
Temperature Ni100/Ni1000	-	-60 to 180 °C *1
Output Voltage	DC 0 to 10V	DC 0 to 10V, (DC -10 to 10V *1)
Output Current	DC 4 to 20mA	DC 4 to 20mA, (DC 0 to 20mA *1)

*1 This function and settings are not supported by GP-Pro EX.

7.3.4 Specification Comparison of “EXM-AMO1HT” and “TM3AQ2 / TM3AQ2G”

Function	EXM-AMO1HT	TM3AQ2 (Screw) / TM3AQ2 (Spring)
Channel	Output 1-point	Output 2-point *2
Output Voltage	DC 0 to 10V	DC 0 to 10V, (DC -10 to 10V *1)
Output Current	DC 4 to 20mA	DC 4 to 20mA, (DC 0 to 20mA *1)

*1 This function and settings are not supported by GP-Pro EX.

*2 Function difference item

7.3.5 Specification Comparison of “EXM-AMI4LT” and “TM3TI4 / TM3TI4G”

Function	EXM-AMI4LT	TM3TI4 (Screw) / TM3TI4G (Spring)
Channel	Input 4-point	Input 4-point
Input Voltage	DC 0 to 10V	DC 0 to 10V, (DC -10 to 10V *1)
Input Current	DC 4 to 20mA	DC 4 to 20mA, (DC 0 to 20mA *1)
Thermocouple Type K	-	-200 to 1300 °C *1
Thermocouple Type J	-	-200 to 1000 °C *1
Thermocouple Type T	-	-200 to 400 °C *1
Thermocouple Type R	-	0 to 1760 °C *1
Thermocouple Type S	-	0 to 1760 °C *1
Thermocouple Type B	-	0 to 1820 °C *1
Thermocouple Type N	-	200 to 1300 °C *1
Thermocouple Type E	-	-200 to 800 °C *1
Thermocouple Type C	-	0 to 2315 °C *1
Temperature PT100	-200 to 600 °C	-200 to 850 °C *2
Temperature PT1000	-200 to 600 °C	-200 to 600 °C
Temperature Ni100/Ni1000	-50 to 150 °C	-60 to 180 °C *2

*1 This function and settings are not supported by GP-Pro EX.

*2 Function difference item

7.3.6 Specification Comparison of “EXM-AVO2HT” and “TM3AQ2 / TM3AQ2G”

Function	EXM-AVO2HT	TM3AQ2 (Screw) / TM3AQ2G (Spring)
Channel	Output 2-point	Output 2-point
Output Voltage	DC -10 to 10V	DC -10 to 10V, (DC 0 to 10V *1)
Output Current	-	DC 4 to 20mA *2, (DC 0 to 20mA *1)

*1 This function and settings are not supported by GP-Pro EX.

*2 Function difference item

7.3.7 Specification Comparison of “EXM-AMM6HT” and “TM3AM6 / TM3AM6G”

Function	EXM-AMM6HT	TM3AM6(Screw) / TM3AM6G (Spring)
Channel	Input 4-point, Output 2-point	Input 4-point, Output 2-point
Input Voltage	DC 0 to 10V	DC 0 to 10V, (DC -10 to 10V *1)
Input Current	DC 4 to 20mA	DC 4 to 20mA, (DC 0 to 20mA *1)
Output Voltage	DC 0 to 10V	DC 0 to 10V, (DC -10 to 10V *1)
Output Current	DC 4 to 20mA	DC 4 to 20mA, (DC 0 to 20mA *1)

*1 This function and settings are not supported by GP-Pro EX.

7.3.8 Specification Comparison of “EXM-ARI8LT” and “TM3TI4 / TM3TI4G”

Function	EXM-ARI8LT	TM3TI4x2 (Screw)/ TM3TI4Gx2 (Spring)
Channel	Input 8-point	Input 4-point *2 *3
Input Voltage	-	DC 0 to 10V *2, (DC -10 to 10V *1)
Input Current	-	DC 4 to 20mA *2, (DC 0 to 20mA *1)
Thermocouple Type K	-	-200 to 1300 °C *1
Thermocouple Type J	-	-200 to 1000 °C *1
Thermocouple Type T	-	-200 to 400 °C *1
Thermocouple Type R	-	0 to 1760 °C *1
Thermocouple Type S	-	0 to 1760 °C *1
Thermocouple Type B	-	0 to 1820 °C *1
Thermocouple Type N	-	200 to 1300 °C *1
Thermocouple Type E	-	-200 to 800 °C *1
Thermocouple Type C	-	0 to 2315 °C *1
Temperature PT100	-200 to 600 °C	-200 to 850 °C *2
Temperature PT1000	-50 to 200 °C	-200 to 600 °C *2
Temperature Ni100/Ni1000	-50 to 150 °C	-60 to 180 °C *2

*1 This function and settings are not supported by GP-Pro EX.

*2 Function difference item

*3 Two TM3TI4 units are required when using 5 channel or more

8 TM3BC IO Configurator

8.1 Overview

The TM3BC IO Configurator software allows you to generate configuration files for TM3BC. This can be done offline, that is, the PC running the tool does not need to be physically connected to the bus coupler.

8.2 Download

Latest TM3BC IO Configurator can be downloaded from the following URL.

https://www.se.com/ww/en/download/document/TM3BC_IO_Configurator/

Note: Software updates will be made accordingly. Check the URL above for the latest version.

And the link destination may differ depending on the update of the Web Site. In that case, please search with [TM3BC IO Configurator].

8.3 Installation Instructions

8.3.1 About installation

- User Rights: you must have the administrator privileges on the workstation to install the TM3BC IO Configurator.

  NOTE: TM3BC IO Configurator is always installed so that it is available for all the users of the workstation.
- The default destination directory of the TM3BC IO Configurator software installation is set as follows:

  Windows OS (32bit) C:¥Program Files¥Schneider Electric¥TM3BC IO Configurator¥

  Windows OS (64bit) C:¥Program Files(x86)¥Schneider Electric¥TM3BC IO Configurator¥

8.3.2 Installation Procedure

*The procedure is an image of version 1.1.9.1. If the version is different, the procedure image may be different.

<table>
<tr><th>Step</th><th>Description</th></tr>
<tr><td>1</td><td>Make sure that your system meets the minimum configuration requirements to install and run TM3BC IO Configurator.
<table>
<tr><th>Item</th><th>Minimum configuration</th></tr>
<tr><td>Processor</td><td>Intel Core 2 Duo processor</td></tr>
<tr><td>RAM</td><td>1GB RAM</td></tr>
<tr><td>Display Resolution</td><td>1280 x 768 pixels</td></tr>
<tr><td>OS</td><td>Microsoft Windows 7 (32-bit or 64-bit processor)
Microsoft Windows 8 (32-bit or 64-bit processor)
Microsoft Windows 8.1 (32-bit or 64-bit processor)
Microsoft Windows 10 (32-bit or 64-bit processor)</td></tr>
<tr><td>Free space</td><td>400MB</td></tr>
</table></td></tr>
<tr><td>2</td><td>Make sure that you are connected as an administrator of the workstation.</td></tr>
<tr><td>3</td><td>Launch TM3BC IO Configurator.exe</td></tr>
<tr><td>4</td><td>Select the language for the installation from the drop-down list and confirm by clicking OK.
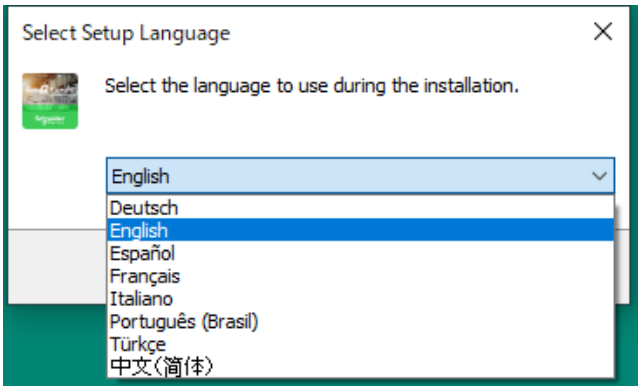

NOTE: The selected language is used for the TM3BC IO Configurator installation and execution.</td></tr>
</table>

Step	Procedure
5	Click [Next]. 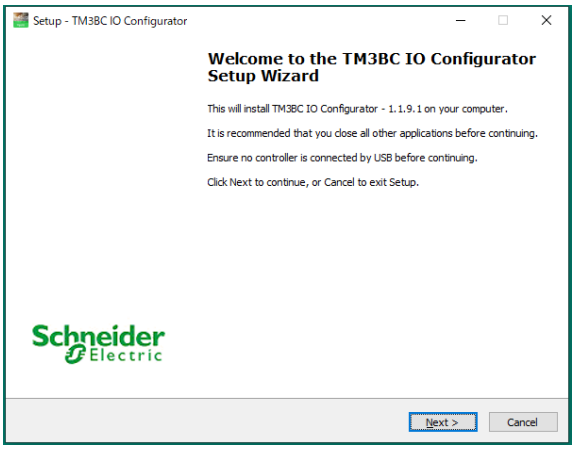
6	Read the software license, confirm that you agree by checking the I accept the agreement box and click [Next] to continue. 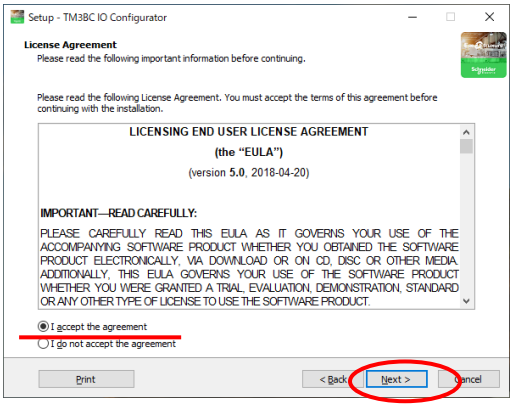
7	Read the Release Notes dialog then click [Next] to continue. 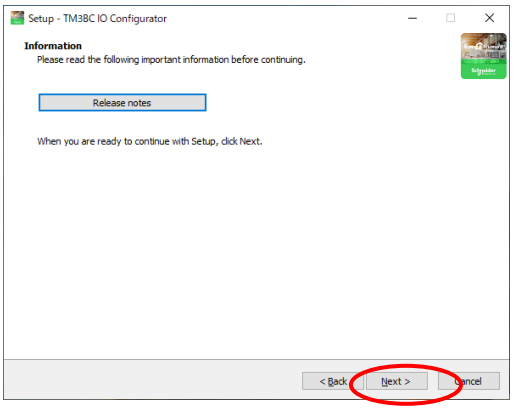

Step	Procedure
8	Setting folder and click [Next] 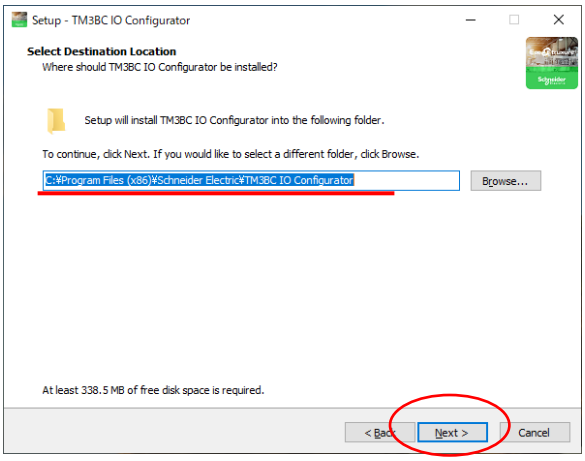
9	Select the shortcuts needed and click Next to continue 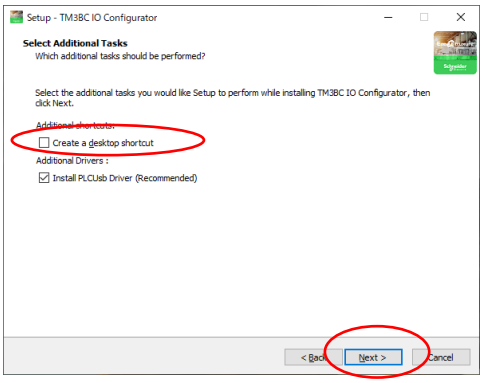
10	Click [Install] to begin the installation. 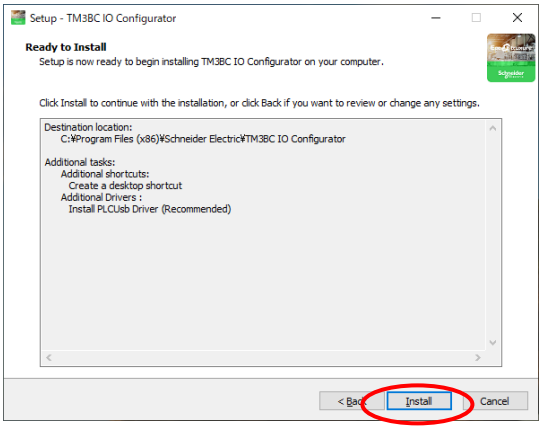

Step	Procedure
11	Display status bar when start install. 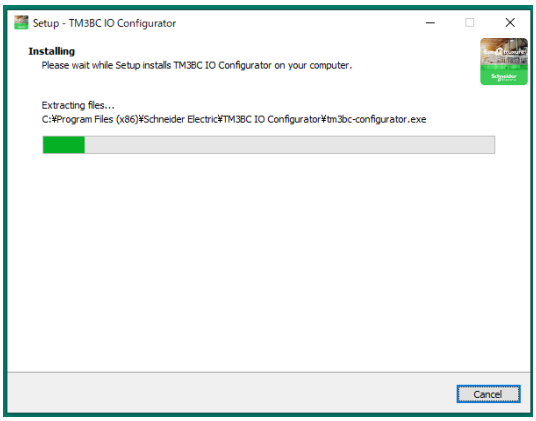 The following screen is displayed during installation, but there is no problem. 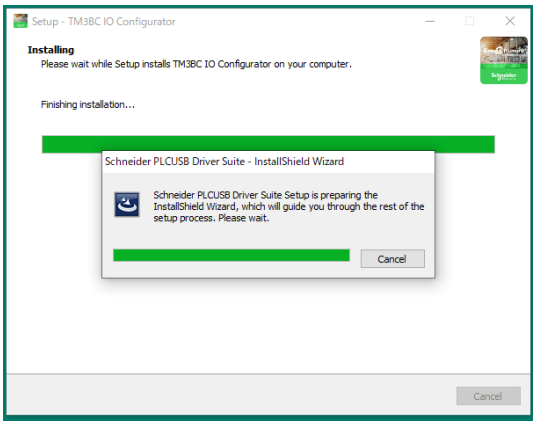
12	Click Finish to complete the installation process. 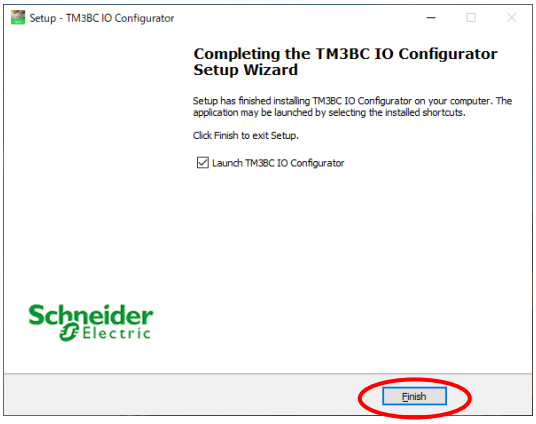
13	You can select Launch TM3BC IO Configurator (Launch desktop shortcut or Windows->Start)

8.4 TM3BC IO Configurator Operation Procedure

* Note: The procedure is an image of version 1.1.9.1.

If the version is different, the procedure image may be different.

8.4.1 Main Screen

(Screen when open)

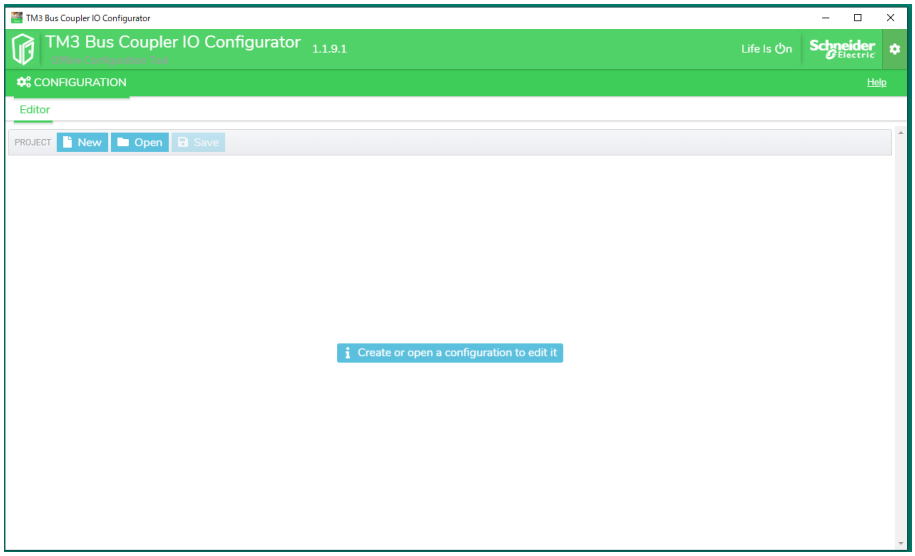

(Screen at operation)

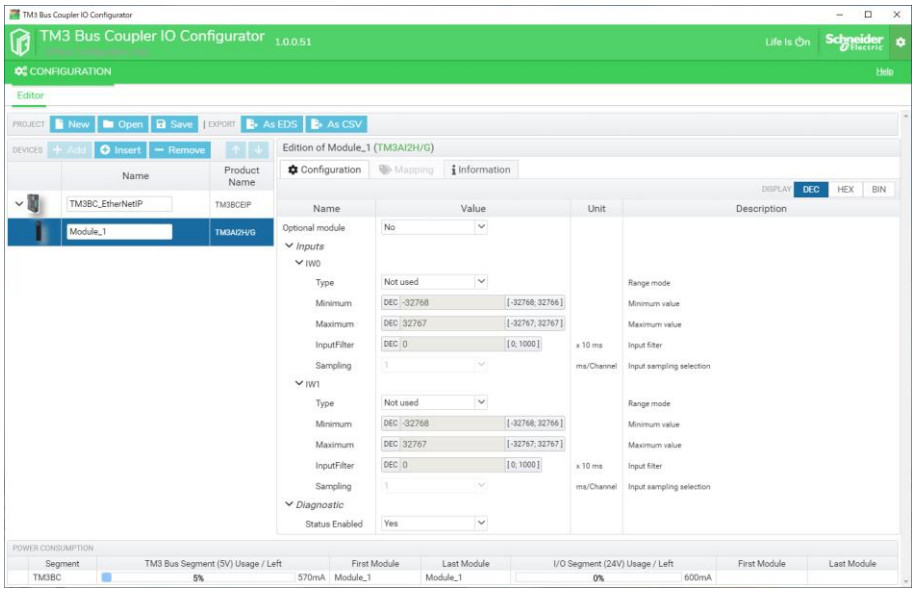

8.4.2 **Create New Project**

Step	Procedure
1	Launch TM3BC IO Configurator and click [New]. 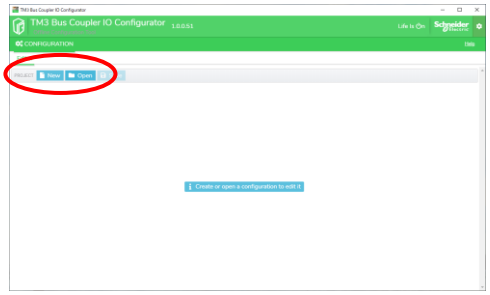
2	Select [TM3BCCO CANopen]. 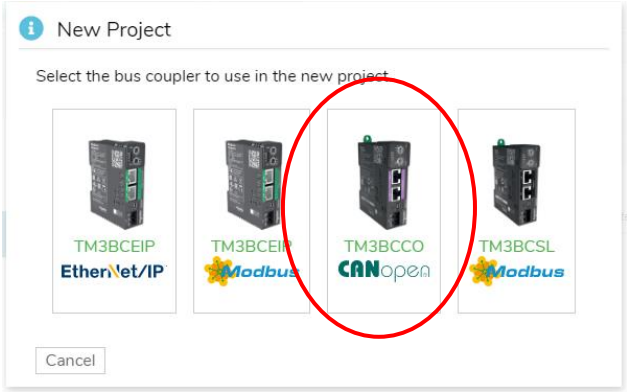
3	Click [Device Name] to display detailed information. 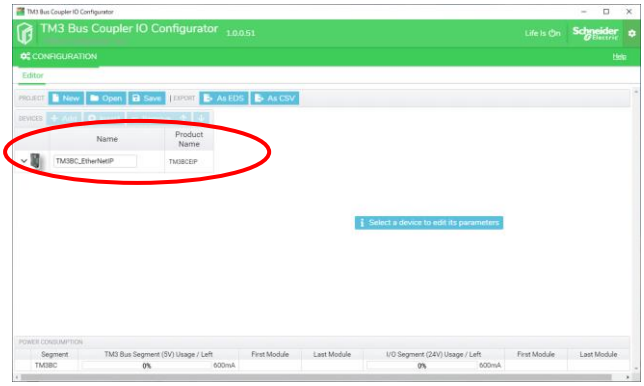 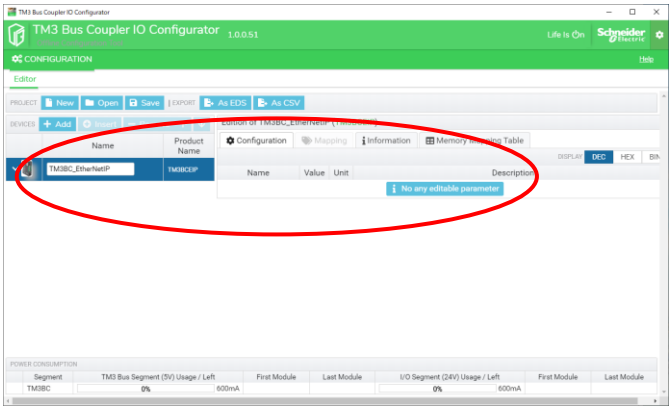

8.4.3 **Add new devices**

Step	Procedure
1	Add device connect to bus coupler. Click [+Add] 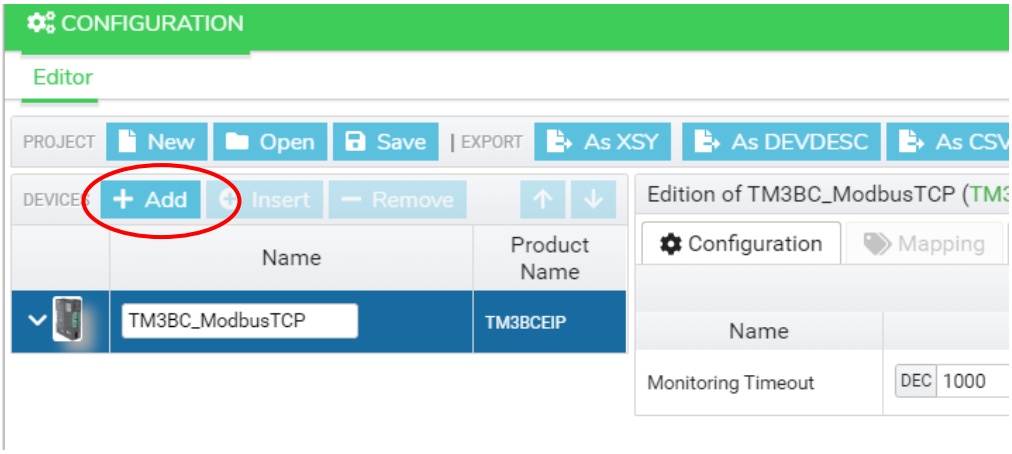
2	Display selection menu appears. 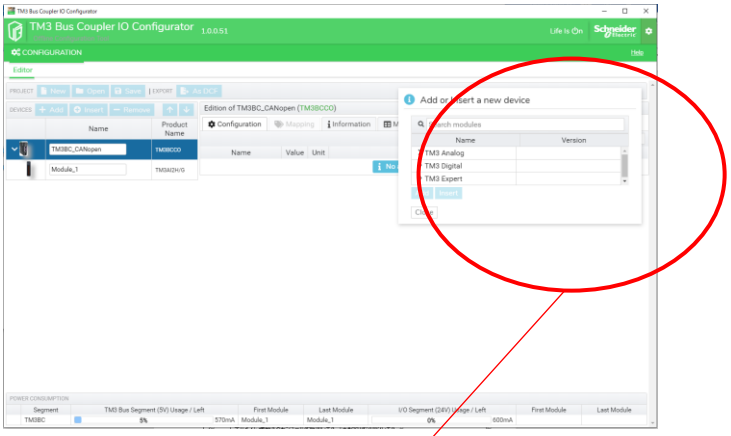 Select the device to connect from the list. (The following is after deployment) 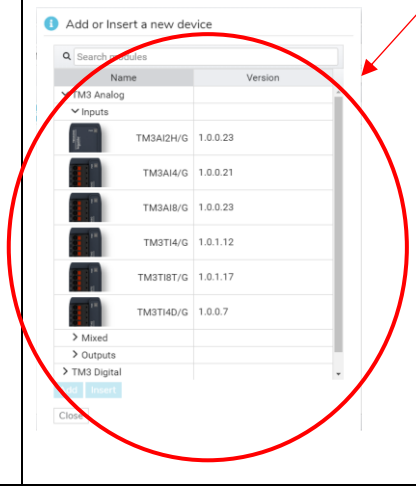

Step	Procedure
3	Added device as below, 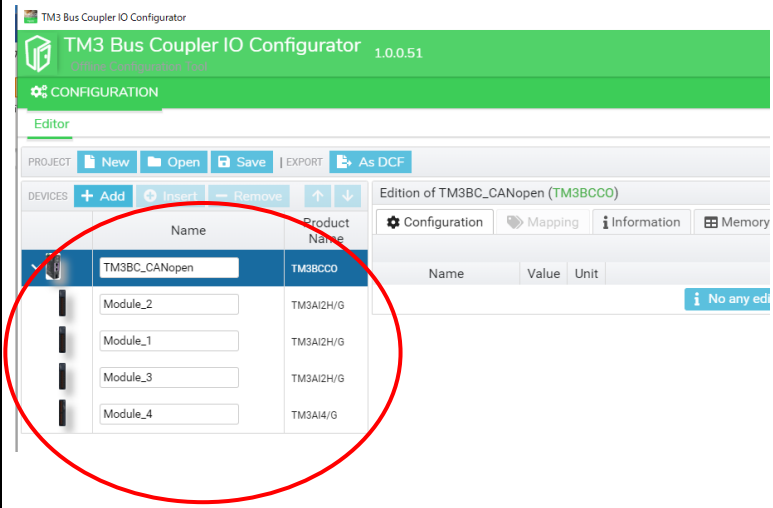
4	Click each device to enable setting description. 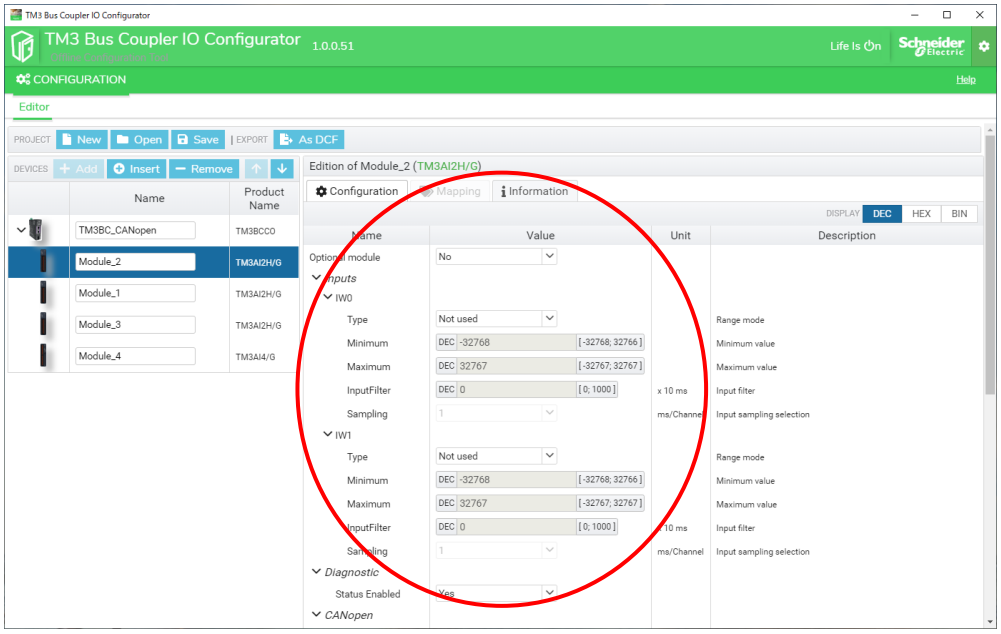

8.4.4 Configuration of data range

(Important) Difference of analog input resolution

Sample: EXM-AMI2HT and TM3AI2H

EXM	Configuration	Data Range	TM3	Configuration	Data Range
EXM-AMI2HT	Fixed	0 ... 4095	TM3-AI2H	Fixed	0 ... 65535 *1
	User Setting	-32768 ... 32767		User Setting	-32768 ... 32767

*1 If you want to replace EXM with TM3, please change the setting of IO Configurator.

GP-Pro EX

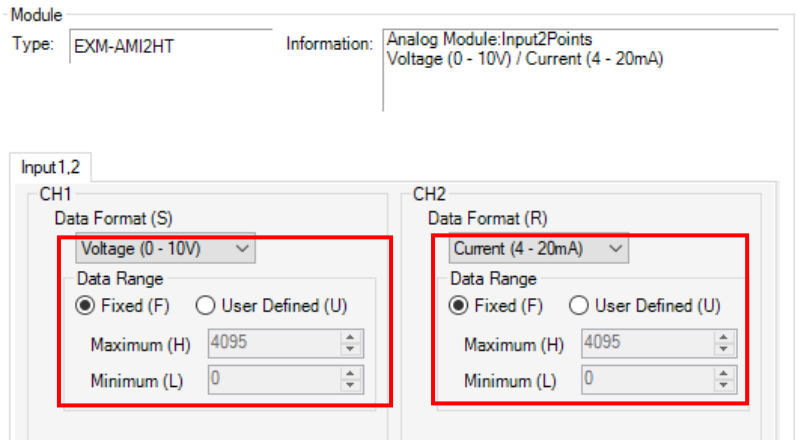

TM3 IO Configurator

[Not Used] -> [0-10V], [4-20mA]

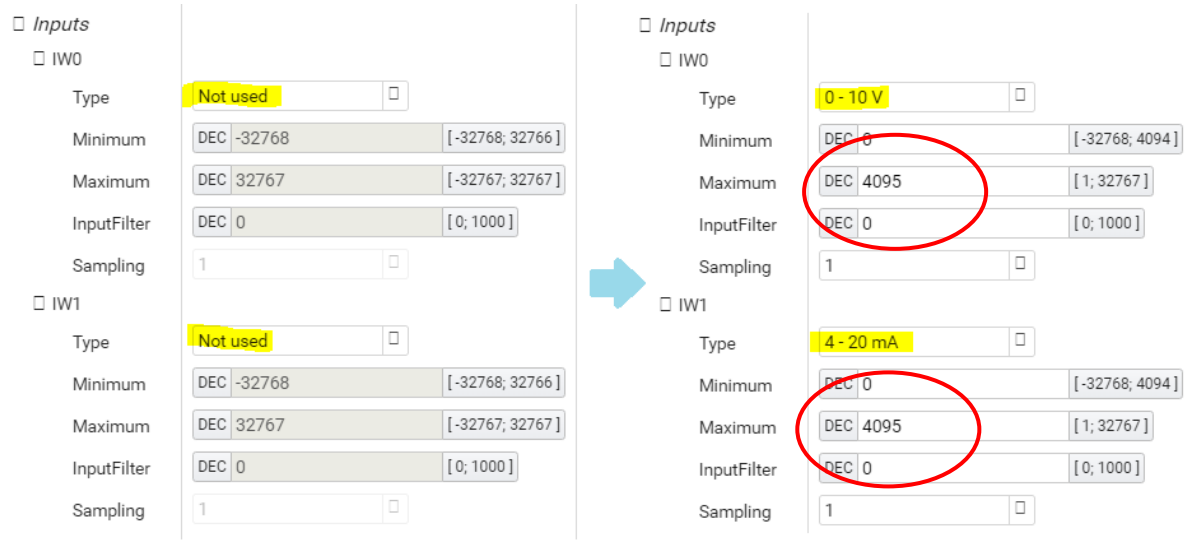

8.4.5 **Data Export**

Step	Procedure
1	Click the button next to Export at the top left of the screen. 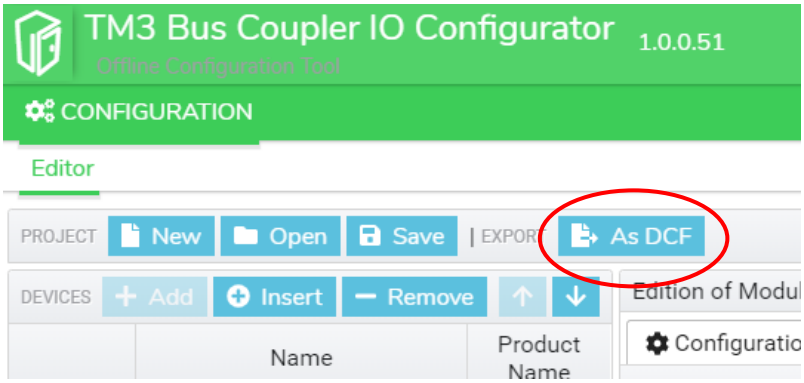 * The data will be saved in any folder.

8.4.6 Data Import

Step	Procedure
1	Data import Import the DCF file set into GP-Pro EX. 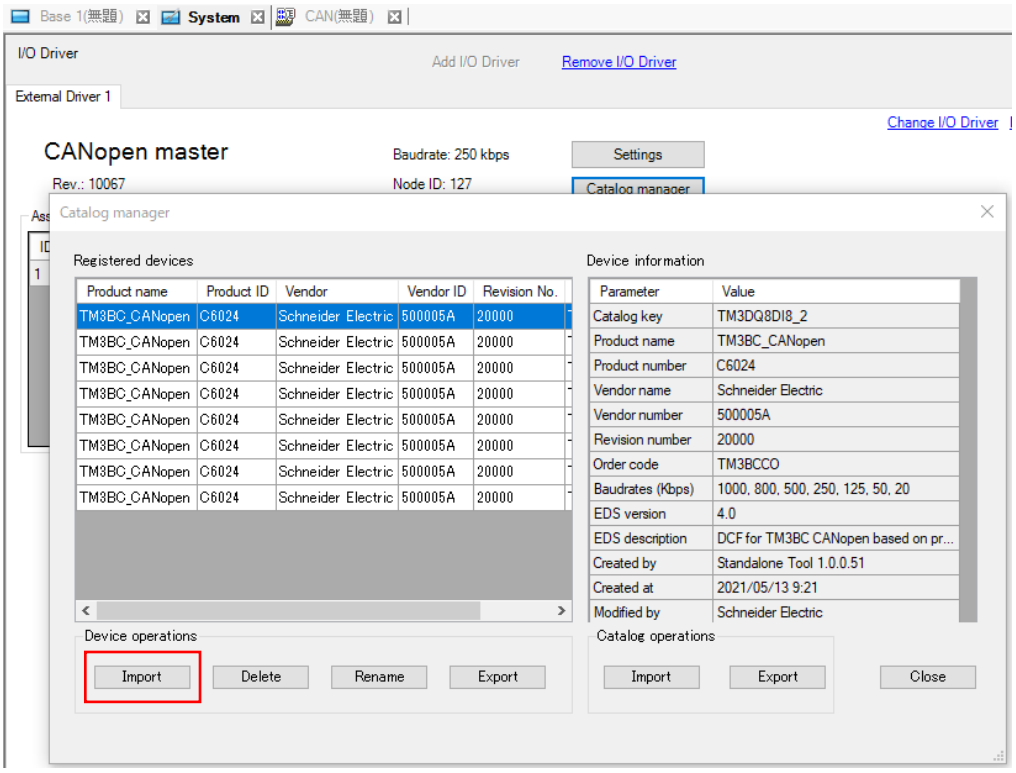 Notes: When editing the data created by the configurator and re-importing it, if the data name (device registration name) is duplicated, it cannot be imported. 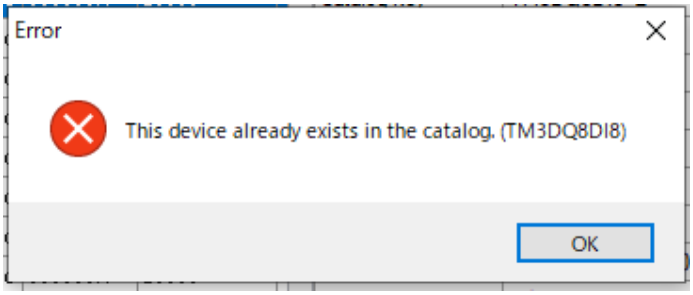 Delete the data or rename the data before executing the import. Also, when you delete the data, the set IO allocation settings are also deleted. Be careful if you have IO assignments.

8.5 Limitations

The limitations are shown below.

	Description	Note
1	Do not enter negative values for the Upper limit threshold and Lower limit threshold of the Analog module.	Data cannot be sent correctly with a negative value setting. Please change to the delta setting so that you can get the data.
2	In the case you change the settings for TM3BC with GP-Pro EX, restart the power of TM3BC after transferring the project data	This change will only take effect after a reboot.

9 About the modules mounted on the rear side of LT3000/STC6000

This chapter describes the TM3 Module device configuration when mounted on the rear of the LT3000/STC6000 model. You can also mount EX module in the same way.

9.1 Installation Procedure

9.1.1 When connecting to LT3000

1. Remove the seal on the module I/F on the back of the LT3000.

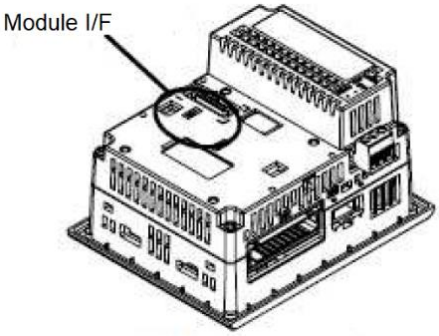

(LT-3200 series)

2. Attach TM3 to the back of LT3000. Insert the expansion connector on the left side of the first module into the module I/F of the LT3000. Install the second module in the same way.

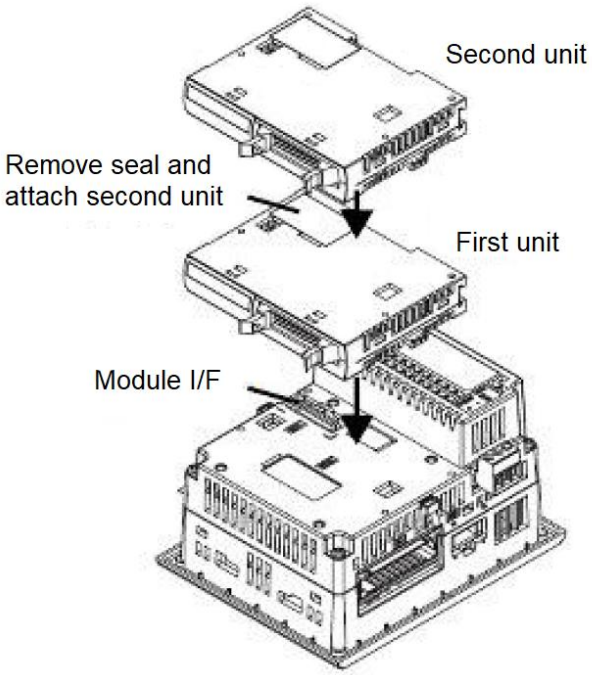

3. Push the latch button on the top to the bottom to secure it.

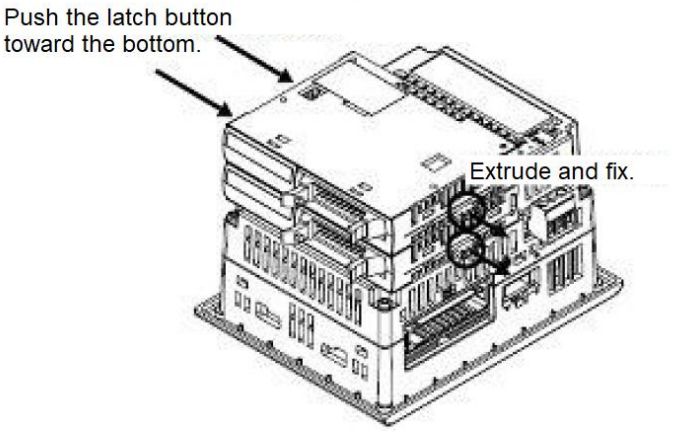

9.1.2 When connecting to STC6000

1. Place the product face down on a clean, flat, level surface.
2. While pressing the “PUSH” mark on the expansion module interface cover, slide the cover towards the top of the product.

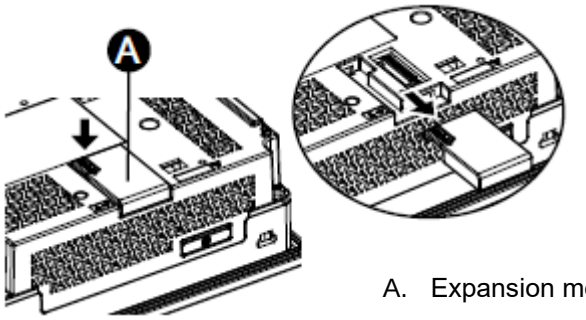

A. Expansion module interface cover

3. Insert the TM3 module’s expansion connector into the expansion module interface.

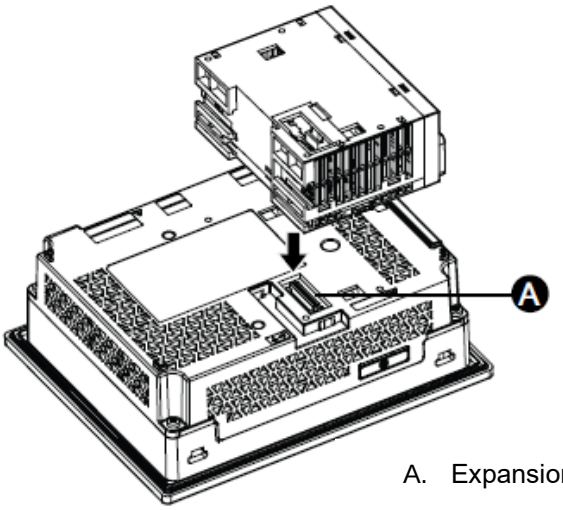

A. Expansion module interface

4. Push the locking device at the top of the TM3 module to secure the TM3 module.

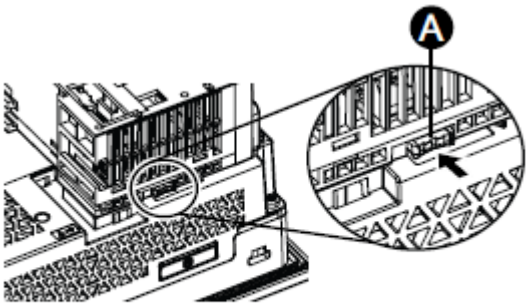

A. Locking device

5. Attach the TM3 module securing hook to the overlap between the TM3 module and this product. Hook the upper protrusion of the securing hook onto this product and the TM3 module, then push in the bottom part of the hook.

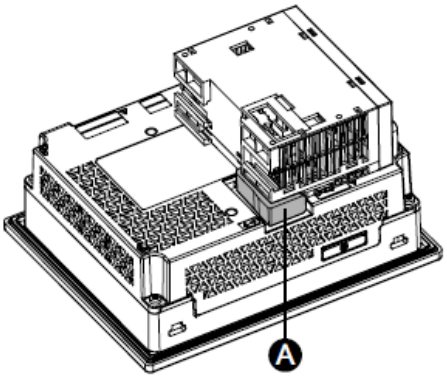

A. TM3 module securing hook

6. Attach the second TM3 module to the first TM3 module and secure them with the latch button in the same manner as described in step 4.

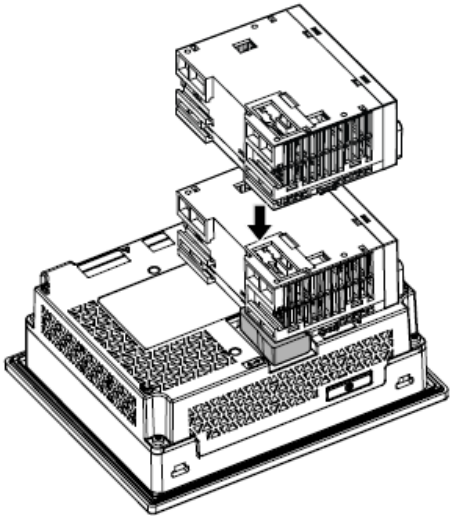

7. Attach the TM3 module securing hook to the overlap between the first and second TM3 modules in the same manner as described in step 5.

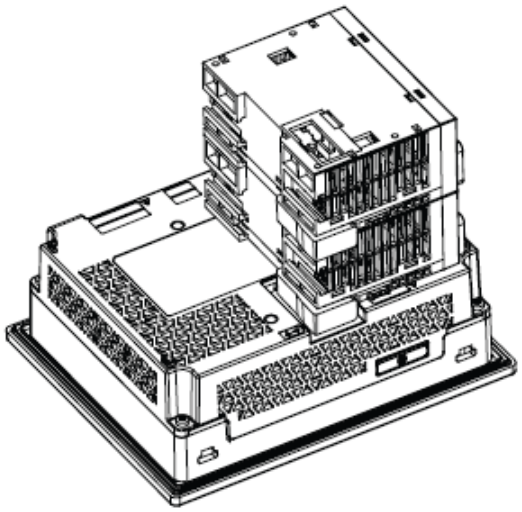

9.2 System configuration

LT3000/STC6000 series can connect the TM3 Modules directly on the back.

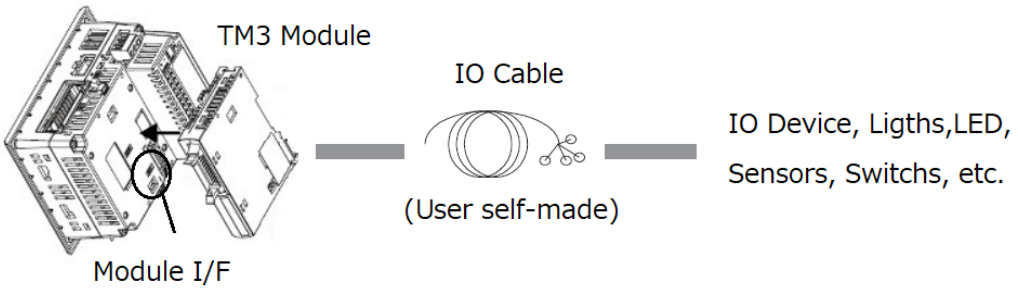

9.3 Rear connectable TM3 Module

Type	TM3		
	Screw type	Spring type	HE10
Input Module	TM3DI8	TM3DI8G	-
	TM3DI16	TM3DI16G	-
Output Module	TM3DQ8T	TM3DQ8TG	-
	TM3DQ8U	TM3DQ8UG	-
	TM3DQ8R	TM3DQ8RG	-
	-	-	TM3DQ16TK
	-	-	TM3DQ16UK
	TM3DQ16R	TM3DQ16RG	-
Input / Output Module	TM3DM8R	TM3DM8RG	-
	TM3DM24R	TM3DM24G	-
Analog Module *1	TM3AI2H	TM3AI2HG	-
	TM3AQ2	TM3AQ2G	-
	TM3TI4	TM3TI4G	-
	TM3AM6	TM3AM6G	-
	TM3TM3	TM3TM3G	-

*1 The Analog Modules can be mounted on the rear of LT3000 with GP-Pro EX V4.09.350 or later.

9.4 Function difference (when mount on the rear of LT3000/STC6000)

There are some differences in function between EX Module and TM3 Module.

The table below shows only the items with function difference.

Note: TM3 analog modules are supported by GP-Pro EX V4.09.350 or later version.

9.4.1 Specification Comparison of "EXM-AMI2HT" and "TM3AI2H / TM3AI2HG"

No functional difference.

9.4.2 Specification Comparison of "EXM-ALM3LT" and "TM3TM3 / TM3TM3G"

Function	EXM-ALM3LT	TM3TM3 (Screw) / TM3TM3G (Spring)
Input Voltage	-	DC 0 to 10V *1, (DC -10 to 10V *2)
Input Current	-	DC 4 to 20mA *1, (DC 0 to 20mA *2)
Thermocouple Type K	0 to 1300 ℃	-200 to 1300 ℃ *1
Thermocouple Type J	0 to 1200 ℃	-200 to 1000 ℃ *1
Thermocouple Type T	0 to 400 ℃	-200 to 400 ℃ *1
Temperature PT100	-100 to 500 ℃	-200 to 850 ℃ *1
Temperature PT1000	-	-200 to 600 ℃ *1
Temperature Ni100/Ni1000	-	-60 to 180 ℃ *1

*1 Items with functional differences

*2 This function and settings are not supported by GP-Pro EX.

9.4.3 Specification Comparison of "EXM-AMM3HT" and "TM3TM3 /TM3TM3G "

No functional difference.

9.4.4 Specification Comparison of "EXM-AMO1HT" and "TM3AQ2 / TM2AQ2G"

Function	EXM-AMO1HT	TM3AQ2 (Screw) /TM3AQ2 (Spring)
Channel	Output 1-point	Output 2-point *1

*1 Items with functional differences"

9.4.5 Specification Comparison of "EXM-AMI4LT" and "TM3TI4 / TM3TI4G"

Function	EXM-AMI4LT	TM3TI4 (Screw) / TM3TI4G (Spring)
TemperaturePT100	-200 to 600 ℃	-200 to 850 ℃ *1
Temperature Ni100/Ni1000	-50 to 150 ℃	-60 to 180 ℃ *1

*1 Items with functional differences"

9.4.6 Specification Comparison of “EXM-AVO2HT and “TM3AQ2 / TM3AQ2G”

Function	EXM-AVO2HT	TM3AQ2 (Screw) / TM3AQ2G (Spring)
Output Current	-	DC 4 to 20mA *1, (DC 0 to 20mA *2)

*1 Items with functional differences.

*2 This function and settings are not supported by GP-Pro EX.

9.4.7 Specification Comparison of “EXM-AMM6HT” and “TM3AM6 / TM3AM6G”

No functional difference.

9.4.8 Specification Comparison of “EXM-ARI8LT” and “TM3TI4 / TM3TI4G”

Function	EXM-ARI8LT	TM3TI4 x2 (Screw) / TM3TI4G x2 (Spring)
Channel	Input 8-point	Input 4-point *1 *3
Input Voltage	-	DC 0 to 10V *1, (DC -10 to 10V *2)
Input Current	-	DC 4 to 20mA *1, (DC 0 to 20mA *2)
Temperature PT100	-200 to 600 °C	-200 to 850 °C *1
Temperature PT1000	-50 to 200 °C	-200 to 600 °C *1
Temperature Ni100/Ni1000	-50 to 150 °C	-60 to 180 °C *1

*1 Items with functional differences.

*2 This function and settings are not supported by GP-Pro EX.

*3 Two units of TM3TI4 or TM3TI4G are required when using 5 channel or more.

9.5 DIO module

9.5.1 Specification Comparison of “TM3DI8” and “EXM-DDI8T”

Reference	TM3DI8	EXM-DDI8DT
Description	Discrete input module, Modicon TM3, 8 inputs (screw) 24 VDC	Discrete input module,8 inputs 24 V DC,1 removable screw terminal
product or component type	Discrete input module	Discrete input module
discrete input number	8	8
discrete input voltage	24 V	24 V
discrete input voltage type	DC	DC
input voltage limits	15...28.8 V for input	20.4...28.8 V
discrete input logic	Sink or source (positive/negative)	Sink or source
discrete input current	7 mA	7 mA
input impedance	3.4 kOhm	3.4 kOhm
response time	4 ms (turn-off) 4 ms (turn-on)	4 ms at state 0 4 ms at state 1
isolation between channels	None	None
isolation between channels and internal logic	Between input and internal logic at 500 V AC. Non-insulated between inputs	500 V for 1 minute
current consumption	0 mA at 24 V DC via bus connector (at state off) 0 mA at 24 V DC via bus connector (at state on) 24 mA at 5 V DC via bus connector (at state on) 5 mA at 5 V DC via bus connector (at state off)	25 mA at 5 V DC at state 1 for all input
local signaling	1 LED per channel (green) for input status	1 display block
electrical connection	11 x 2.5 mm² removable screw terminal block with pitch 5.08 mm adjustment for inputs	1 removable screw terminal block
mounting support	plate or panel with fixing kit Top hat type TH35-15 rail conforming to IEC 60715 Top hat type TH35-7.5 rail conforming to IEC 60715	35 mm symmetrical DIN rail
net weight	85 g	85 g
depth	70 mm	70 mm
height	90 mm	90 mm
width	23.6 mm	23.5 mm

9.5.2 Specification Comparison of “TM3DI16” and “EXM-DDI16DT”

Reference	TM3DI16	EXM-DDI16DT
Description	Discrete input module, Modicon TM3, 16 inputs (screw) 24 VDC	Discrete input module, Modicon M238 logic controller, 16 inputs 24 V DC, 1 removable screw terminal block
discrete input number	16 for input conforming to IEC 61131-2 type 3	16
discrete input logic	Sink or source (positive/negative)	Sink or source
discrete input voltage	24 V	24 V
discrete input current	7 mA for input	7 mA for input
discrete I/O number	16	16
current consumption	0 mA at 24 V DC via bus connector (at state off) 0 mA at 24 V DC via bus connector (at state on) 40 mA at 5 V DC via bus connector (at state on) 5 mA at 5 V DC via bus connector (at state off)	0 mA at 24 V DC via bus connector (at state off) 0 mA at 24 V DC via bus connector (at state on) 40 mA at 5 V DC via bus connector (at state on) 5 mA at 5 V DC via bus connector (at state off)
discrete input voltage type	DC	DC
voltage state 1 guaranteed	15...28.8 V for input	20.4...28.8 V
input impedance	3.4 kOhm	3.4 kOhm
response time	4 ms (turn-off) 4 ms (turn-on)	4 ms (turn-off) 4 ms (turn-on)
local Signaling	1 LED per channel (green) for input status	1 display block
electrical connection	10 x 1.5 mm² removable screw terminal block with pitch 3.81 mm adjustment for inputs	1 removable screw terminal block
mounting support	plate or panel with fixing kit Top hat type TH35-15 rail conforming to IEC 60715 Top hat type TH35-7.5 rail conforming to IEC 60715	35 mm symmetrical DIN rail
net weight	100 g	100 g
depth	70 mm	70 mm
height	90 mm	90 mm
width	23.6 mm	23.5 mm

9.5.3 Specification Comparison of “TM3DQ8R” and “EXM-DRA8RT”

Reference	TM3DQ8R	EXM-DRA8RT
component type	Discrete output module	Discrete output module
discrete output type	Relay normally open	Relay
discrete output number	8	8
discrete output logic	Positive or negative	1 NO
discrete output voltage	24 V DC for relay output 240 V AC	24 V DC for relay output 240 V AC
discrete output current	2000 mA for relay output	2000 mA for relay output
discrete I/O number	8	8
current consumption	0 mA at 24 V DC via bus connector (at state off) 40 mA at 24 V DC via bus connector (at state on) 5 mA at 5 V DC via bus connector (at state off) 30 mA at 5 V DC via bus connector (at state on)	40 mA at 24 V DC at state 1 for all output 30 mA at 5 V DC at state 1 for all output
response time	10 ms (turn-on) 5 ms (turn-off)	<= 10 ms from state 0 to state 1 for input <= 5 ms from state 1 to state 0 for input
mechanical durability	20000000 cycles	20000000 cycles
minimum load	10 mA at 5 V DC for relay output	0.1 mA at 0.1 V DC
local Signaling	1 LED per channel (green) for output status	1 display block
electrical connection	11 x 2.5 mm² removable screw terminal block with pitch 5.08 mm adjustment for outputs	1 removable screw terminal block
mounting support	plate or panel with fixing kit Top hat type TH35-15 rail	35 mm symmetrical DIN rail
net weight	110 g	110 g
depth	70 mm	70 mm
height	90 mm	90 mm
width	23.6 mm	23.5 mm

9.5.4 Specification Comparison of “TM3DQ8T” and “EXM-DDO8TT

Reference	TM3DQ8T	EXM-DDO8TT
component type	Discrete output module	Discrete output module
discrete output type	Transistor	Transistor
discrete output number	8	8
discrete output logic	Positive logic (source)	Source
discrete output voltage	24 V DC transistor output	24 V DC transistor output
discrete output current	500 mA transistor output	500 mA transistor output
discrete I/O number	8	8
response time	450 µs (turn-off) 450 µs (turn-on)	450 µs from state 0 to state 1 450 µs from state 1 to state 0
maximum leakage current	0.1 mA transistor output	0.1 mA
maximum voltage drop	<0.4 V	<0.4 V
maximum tungsten load	<3 W transistor output	12 W
local Signaling	for output status 1 LED per channel (green)	1 display block
electrical connection	11 x 2.5 mm² removable screw terminal block pitch 5.08 mm for outputs	1 removable screw terminal block
mounting support	plate or panel with fixing kit	35 mm symmetrical DIN rail
net weight	76 g	85 g
depth	70 mm	70 mm
height	90 mm	90 mm
width	23.6 mm	23.5 mm

9.5.5 Specification Comparison of “TM3DQ8U” and “EXM-DDO8UT

Reference	TM3DQ8U	EXM-DDO8UT
component type	Discrete output module	Discrete output module
discrete output type	Transistor	Transistor
discrete output number	8	8
discrete output logic	Negative logic (sink)	Sink
discrete output voltage	24 V DC for transistor output	24 V DC for transistor output
discrete output current	50 mA for transistor output	50 mA for transistor output
discrete I/O number	8	8
current consumption	0 mA at 24 V DC via bus connector (at state off) 20 mA at 24 V DC via bus connector (at state on) 5 mA at 5 V DC via bus connector (at state off) 10 mA at 5 V DC via bus connector (at state on)	20 mA at 24 V DC at state 1 for all output 10 mA at 5 V DC at state 1 for all output
response time	450 µs (turn-off) 450 µs (turn-on)	300 µs at state 0 300 µs at state 1
local Signaling	1 LED per channel (green) for output status	1 display block
electrical connection	11 x 2.5 mm² removable screw terminal block with pitch 5.08 mm adjustment for outputs	1 removable screw terminal block
insulation	Between output and internal logic at 500 V AC Non-insulated between outputs	none
marking	CE	CE
mounting support	plate or panel with fixing kit	35 mm symmetrical DIN rail
net weight	76 g	85 g
depth	70 mm	70 mm
height	90 mm	90 mm
width	23.6 mm	23.5 mm

9.5.6 Specification Comparison of “TM3DQ16TK” and “EXM-DDO16TK

Reference	TM3DQ16TK	EXM-DDO16TK
component type	Discrete output module	Discrete output module
discrete output type	Transistor	Transistor
discrete output number	16	16
discrete output logic	Positive logic (source)	Source
discrete output voltage	24 V DC for transistor output	24 V DC for transistor output
discrete output current	100 mA for transistor output	16
discrete I/O number	16	16
current consumption	0 mA at 24 V DC via bus connector (at state off) 20 mA at 24 V DC via bus connector (at state on) 5 mA at 5 V DC via bus connector (at state off) 15 mA at 5 V DC via bus connector (at state on)	20 mA at 24 V DC at state 1 for all output 15 mA at 5 V DC at state 1 for all output
response time	450 µs (turn-off) 450 µs (turn-on)	450 µs from state 0 to state 1 450 µs from state 1 to state 0
maximum leakage current	0.1 mA for transistor output	0.1 mA
maximum voltage drop	<0.4 V	1 V at state 1
maximum tungsten load	<9.6 W for transistor output	9.6 W
local Signaling	1 LED per channel (green) for output status	2 display blocks
electrical connection	HE-10 connector for outputs	1 connector HE10
marking	CE	CE
mounting support	plate or panel with fixing kit Top hat type TH35-15 rail conforming to IEC 60715 Top hat type TH35-7.5 rail conforming to IEC 60715	35 mm symmetrical DIN rail
net weight	72 g	70 g
depth	70 mm	70 mm
height	90 mm	90 mm
width	17.6 mm	17.6 mm

9.5.7 Specification Comparison of “TM3DQ16UK” and “EXM-DDO16UK

Reference	TM3DQ16UK	EXM-DDO16UK
component type	Discrete output module	Discrete output module
discrete output type	Transistor	Transistor
discrete output number	16	16
discrete output logic	Negative logic (sink)	Sink
discrete output voltage	24 V DC transistor output	24 V DC transistor output
discrete output current	100 mA transistor output	100 mA transistor output
discrete I/O number	16	16
current consumption	0 mA 24 V DC via bus connector at state off 20 mA 24 V DC via bus connector at state on 5 mA 5 V DC via bus connector at state off 15 mA 5 V DC via bus connector at state on	20 mA 24 V DC at state 1 for all output 10 mA 5 V DC at state 1 for all output
response time	450 µs (turn-off) 450 µs (turn-on)	300 µs from state 0 to state 1 300 µs from state 1 to state 0
maximum leakage current	0.1 mA transistor output	0.12 A
maximum voltage drops	<0.4 V	1 V at state 1
local signaling	for output status 1 LED per channel (green)	2 display blocks
electrical connection	HE-10 connector for outputs	1 connector HE10
marking	CE	CE
mounting support	plate or panel with fixing kit Top hat type TH35-15 rail IEC 60715 Top hat type TH35-7.5 rail IEC 60715	35 mm symmetrical DIN rail
net weight	111 g	70g
depth	70 mm	70 mm
height	90 mm	90 mm
width	17.6 mm	17.6 mm

9.5.8 Specification Comparison of “TM3DM8R” and “EXM-DMM8DRT

Reference	TM3DM8R	EXM-DMM8DRT
component type	Discrete I/O module	Discrete I/O module
discrete input number	4 for input conforming to IEC 61131-2 Type 1	4
discrete input logic	Sink or source (positive/negative)	Sink or source (positive/negative)
discrete input voltage	24 V	24 V
discrete input current	7 mA for input	7 mA
discrete output type	Relay normally open	Relay
discrete output number	4	4
discrete output logic	Positive or negative	Positive or negative
discrete output voltage	24 V DC for relay output 240 V AC for relay output	24 V DC for relay output 240 V AC for relay output
discrete output current	2000 mA for relay output	2000 mA for relay output
discrete I/O number	8	8
current consumption	0 mA at 24 V DC via bus connector (at state off) 0 mA at 24 V DC via bus connector (at state on) 25 mA at 5 V DC via bus connector (at state on) 5 mA at 5 V DC via bus connector (at state off)	20 mA at 24 V DC at state 1 for all input/output 25 mA at 5 V DC at state 1 for all input/output
discrete input voltage type	DC	DC
voltage state 1 guaranteed	15...28.8 V for input	20.4...28.8 V
input impedance	3.4 kOhm	3.4 kOhm
response time	4 ms (turn-off) 4 ms (turn-on)	4 ms (turn-off) 4 ms (turn-on)
maximum current per output common	7 A	7 A
mechanical durability	20000000 cycles	20000000 cycles
minimum load	10 mA at 5 V DC for relay output	10 mA at 5 V DC for relay output
local Signaling	1 LED per channel (green) for I/O state	1 display block
electrical connection	11 x 2.5 mm² removable screw terminal block with pitch 5.08 mm adjustment for inputs and outputs	1 removable screw terminal block
mounting support	plate or panel with fixing kit Top hat type TH35-15 rail conforming to IEC 60715 Top hat type TH35-7.5 rail conforming to IEC 60715	35 mm symmetrical DIN rail
net weight	95 g	95 g
Depth	70 mm	70 mm
Height	90 mm	90 mm
Width	23.6 mm	23.5 mm

9.5.9 Specification Comparison of “TM3DM24R” and “EXM-DMM24DRT

Reference	TM3DM24R	EXM-DMM24DRF
product or component type	Discrete I/O module	Discrete I/O module
discrete input number	16 for input conforming to IEC 61131-2 Type 1	16
discrete input logic	Sink or source (positive/negative)	Sink or Source
discrete input voltage	24 V	24 V
discrete input current	7 mA for input	7mA
discrete output type	Relay normally open	Relay
discrete output number	8	8
discrete output logic	Positive or negative	Positive or negative
discrete output voltage	24 V DC for relay output 240 V AC for relay output	24 V DC for relay output 240 V AC for relay output
discrete output current	2000 mA for relay output	2000 mA for relay output
discrete I/O number	24	24
current consumption	0 mA at 24 V DC via bus connector (at state off) 0 mA at 24 V DC via bus connector (at state on) 5 mA at 5 V DC via bus connector (at state off) 65 mA at 5 V DC via bus connector (at state on)	45 mA at 24 V DC at state 1 for all input/output 65 mA at 5 V DC at state 1 for all input/output
discrete input voltage type	DC	DC
voltage state 1 guaranteed	15...28.8 V for input	20.4...28.8 V
input impedance	3.4 kOhm	3.4 kOhm
response time	4 ms (turn-off) 4 ms (turn-on)	4 ms at state 0 for input 4 ms at state 1 for input <= 10 ms from state 0 to state 1
maximum current per output common	7 A	7 A
mechanical durability	20000000 cycles	20000000 cycles
minimum load	10 mA at 5 V DC for relay output	
local Signaling	1 LED per channel (green) for I/O state	1 display block
marking	CE	CE
mounting support	plate or panel with fixing kit Top hat type TH35-15 rail conforming to IEC 60715 Top hat type TH35-7.5 rail conforming to IEC 60715	35 mm symmetrical DIN rail
net weight	149 g	140 g
depth	70 mm	70 mm
height	90 mm	90 mm
width	39.1 mm	39.1 mm

9.6 Configuration when mounting on the rear of LT3000/STC6000 series

9.6.1 Module setting method

The setting method of between LT3000/STC6000 series and TM3 module is shown below.

The configuration of TM3 in GP-Pro EX as same as EX module.

1. Select the [LT3000 Series] or [STC6000 Series] for project model selection with GP-Pro EX.
   Select [EXM Driver] when selecting [External I/O].

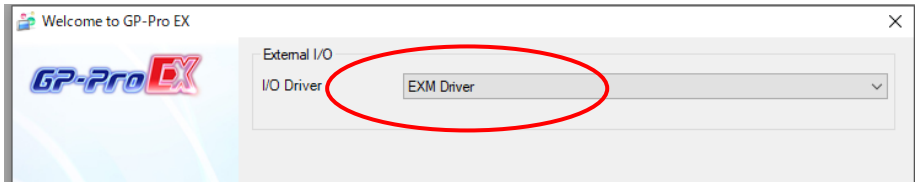

2. From the [Project] menu, click [System Settings]-[I / O Driver Settings] to open the [External Driver] tab.

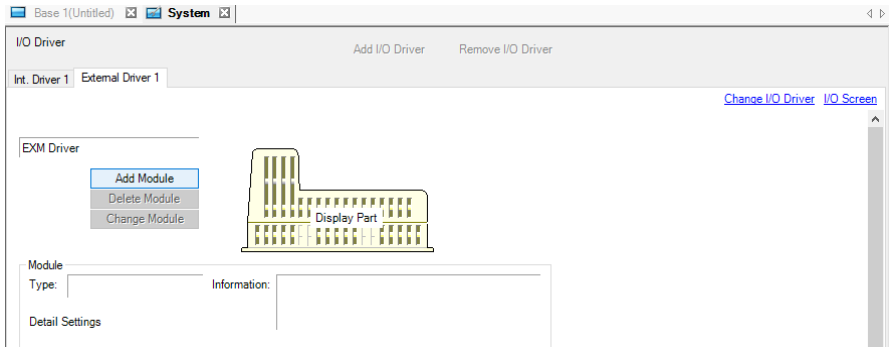

3. Click [Add module], display dialog of [module detail]. Select model of module and click [OK].

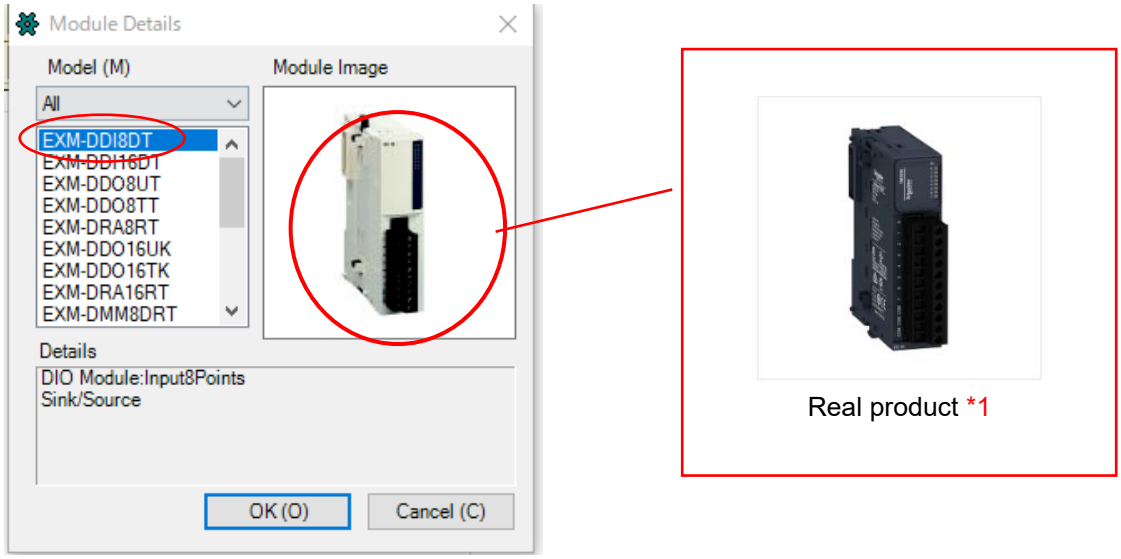

*1 The image of the editor and the appearance of the real product (TM3) are different. Please be careful when setting.

(Example) Display on GP-Pro EX

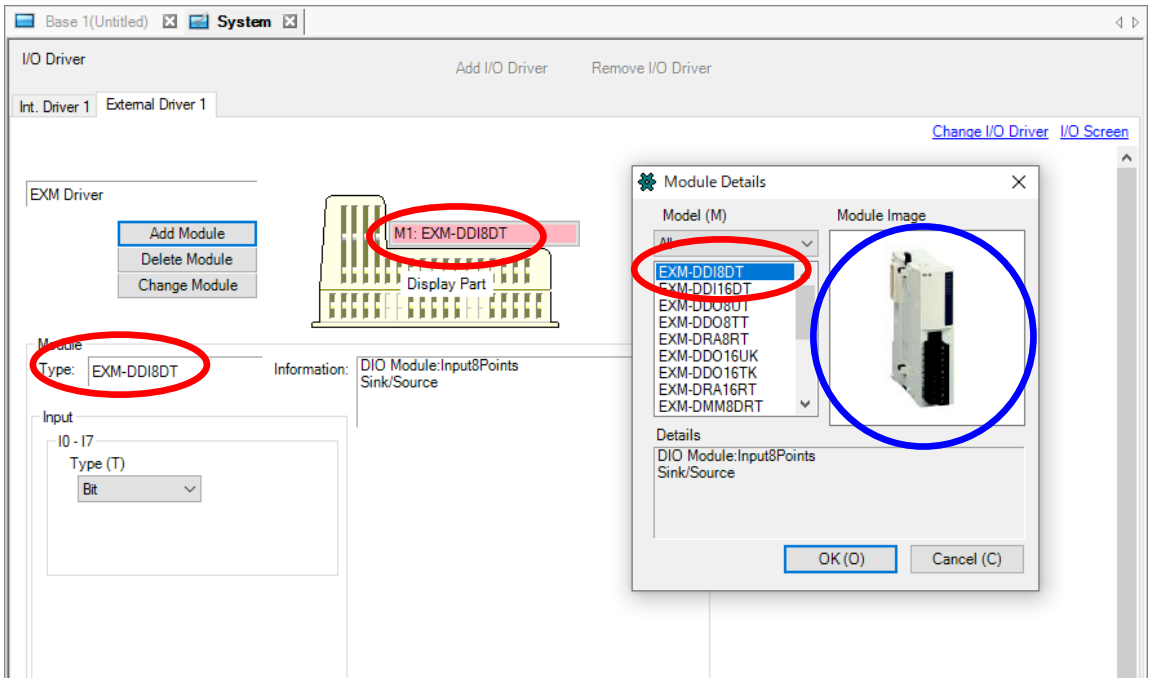

Only the EX module models are displayed in the editor.

Set the EX module model while comparing it with the TM3 model.

EX module	TM3 module	Functional difference
EXM-DDI8DT	TM3DI8	None
EXM-DDI16DT	TM3DI16	None
EXM-DRA8RT	TM3DQ8R	None
EXM-DRA16RT	TM3DQ16R	None
EXM-DDO8UT	TM3DQ8U	None
EXM-DDO16UK	TM3DQ16UK	None
EXM-DDO8TT	TM3DQ8T	None
EXM-DDO16TK	TM3DQ16TK	None
EXM-DMM8DRT	TM3DM8R	None
EXM-DMM24DRF	TM3DM24R	None
EXM-AMI2HT	TM3AI2H	None
EXM-ALM3LT	TM3TM3	Refer to 9.4.2
EXM-AMM3HT	TM3TM3	None
EXM-AMO1HT	TM3AQ2	Refer to 9.4.4
EXM-AMI4LT	TM3TI4	Refer to 9.4.5
EXM-AVO2HT	TM3AQ2	None
EXM-AMM6HT	TM3AM6	None
EXM-ARI8LT	TM3TI4	Refer to 9.4.8

4. Module-specific setting items are displayed. See the configuration guide for each detail.

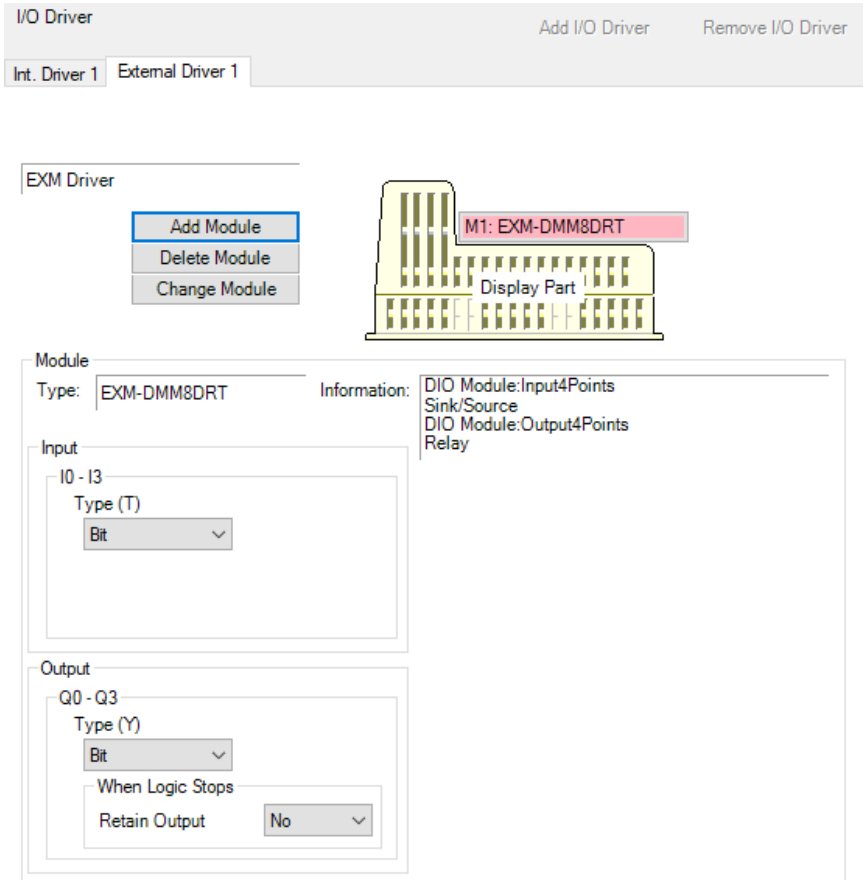

5. When to add, change and delete module, click on the modules and click the button below to change it.

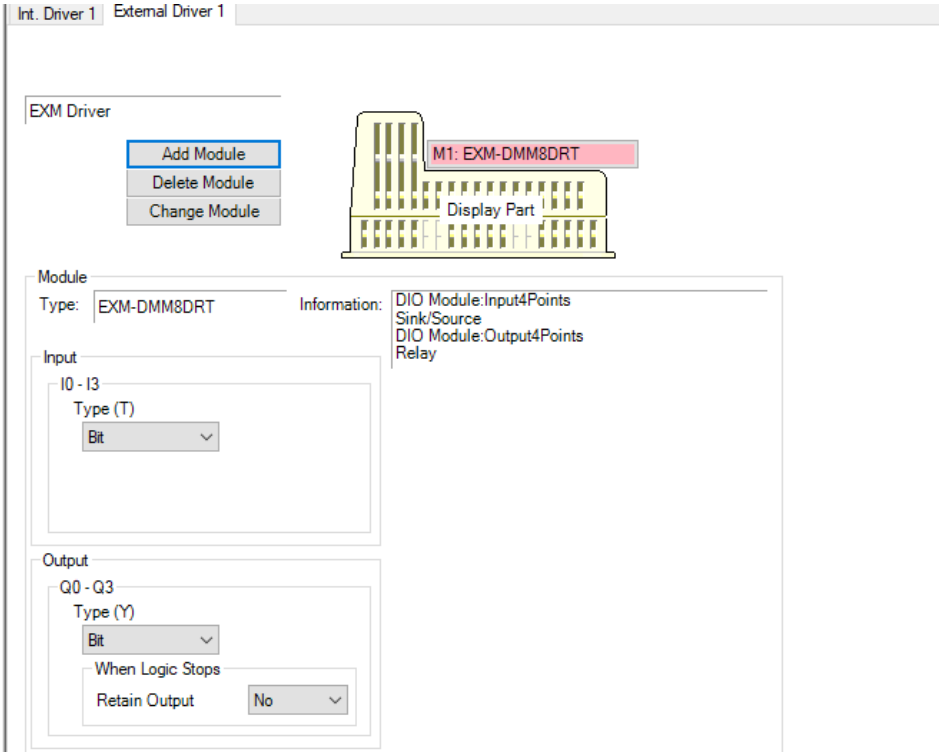

9.6.2 Number of connectable modules on the rear of LT3000/STC6000 series

The number of EX modules that can be connected differs depending on the display or EX module type used. Please refer to the following table for details.

Series	Number of units
LT-3200 Series	2 *1
LT-3300 Series	3 *1
STC6000 Series	2 *1*2

*1 When connecting TM3DM24R, only 1 unit can be connected.

*2 3 units of TM3 modules can be connected by using the following option items.

- Modicon TM3 Remote Transmitter Module (TM3XTRA1)
- Modicon TM3 Remote Receiver Module (TM3XREC1)
- Cable for connecting transmitter module and receiver module

Reference	Description	Use	Length
ACTPC6FULS05WE	Cat6 Patch Cord F/UTP LSZH, WHITE	Connects the transmitter to the receiver.	0.5m
ACTPC6FULS10WE			1m
ACTPC6FULS20WE			2m
ACTPC6FULS30WE			3m
ACTPC6FULS50WE			5m

9.6.3 In case of connecting 3 units of TM3 / EX modules with STC6000 Series

Please connect with one of the following configurations.
There's no setting required in GP-Pro EX for the transmitter module and receiver module.
The transmitter and receiver modules are not counted in the number of connected units.
TM3 modules and EX modules can be used at the same time.

- When mounting Transmitter only on the back of STC6000:
  You can connect max. 3 units of TM3/EX modules at Receiver side.

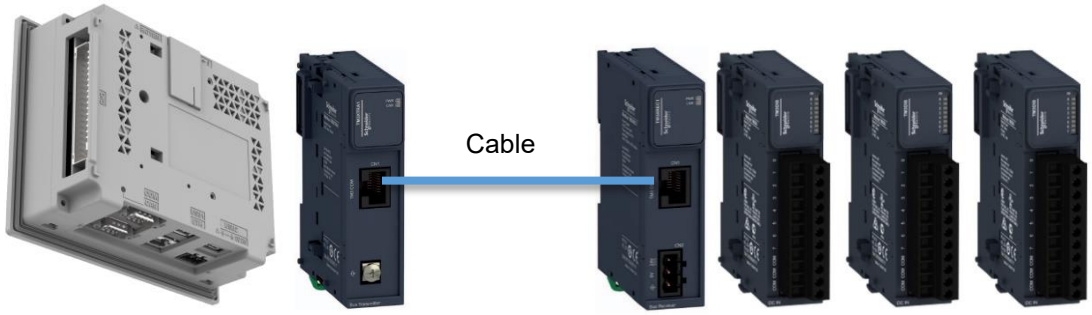

STC6000 ＋ Transmitter (TM3XTRA1) Receiver (TM3XREC1) ＋ TM3 ＋ TM3 ＋ TM3

- When mounting one TM3/EX module and Transmitter on the back of STC6000:
  You can connect max. 2 units of TM3/EX modules at Receiver side.

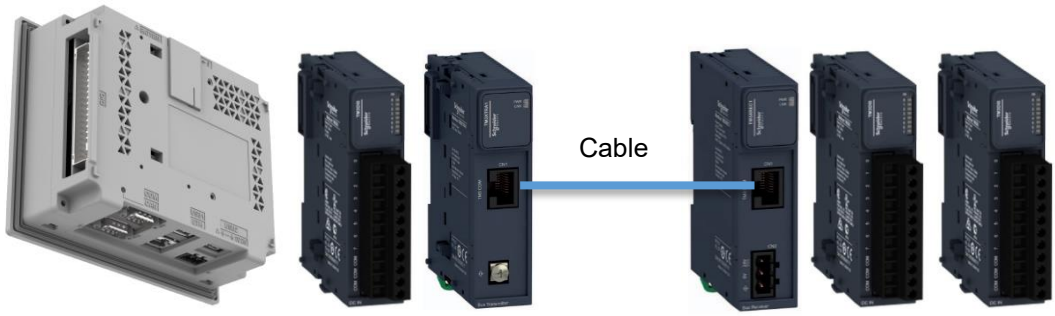

STC6000 + TM3 ＋ Transmitter*1 (TM3XTRA1) Receiver (TM3XREC1) ＋ TM3 ＋ TM3

*1 When mounting one TM3 module and one transmitter module on the rear of STC6000 Series, mount TM3 module first, and then mount the transmitter module as a 2nd unit.

10 TM3 Module Specification

10.1 Overview

The range of TM3 digital I/O expansion modules includes:

- Input modules
- Output modules
- Mixed input/output modules
- Analog module

All TM3 digital I/O expansion modules are equipped with (depending on the reference):

- Removable screw terminal blocks
- Removable spring terminal blocks
- HE10 (MIL 20) connectors

For modules with HE10 (MIL 20) connectors, a group of products known as Telefast 2 are available that enable these modules to be quickly connected to sensors and actuators.

10.2 General Specification

10.2.1 Electrical specifications

DIO module

Reference	CH	type	Voltage / current	Terminal Type / Pitch
Input module				
TM3DI8	8	Regular inputs	24Vdc / 7mA	Removable screw terminal block / 5.08 mm
TM3DI8G				Removable spring terminal block / 5.08 mm
TM3DI16	16		24Vdc / 7mA	Removable screw terminal block / 3.81 mm
TM3DI16G				Removable spring terminal block / 3.81 mm
TM3DQ8R	8	Relay outputs	24 Vdc / 240 Vac 7 A maximum per common line / 2 A maximum per output	Removable screw terminal block / 5.08 mm
TM3DQ8RG				Removable spring terminal block / 5.08 mm
TM3DQ16R	16		24 Vdc / 240V ac 8A(common) /2A (output)	Removable screw terminal block / 3.81 mm
TM3DQ16RG				Removable spring terminal block / 3.81 mm
TM3DQ8T	8	Regular transistor outputs (source)	24 Vdc / 240V ac 4A(common) /0.5A (output)	Removable screw terminal block / 5.08 mm
TM3DQ8TG				Removable spring terminal block / 5.08 mm
TM3DQ8U	8	Regular transistor outputs (sink)	24 Vdc / 240V ac 4A(common) /0.5A (output)	Removable screw terminal block / 5.08 mm
TM3DQ8UG				Removable spring terminal block / 5.08 mm
TM3DQ16TK	16	Regular transistor outputs (source)	24 Vdc 2A(common) /0.1A (output)	HE10 (MIL 20)
TM3DQ16UK		Regular transistor outputs (sink)	24 Vdc 2A(common) /0.1A (output)	
Input/Output module				
TM3DM8R	4	Input	24Vdc / 7mA	Removable screw terminal block / 5.08 mm
	4	Relay outputs	24 Vdc / 240V ac 7A(common)/2A (output)	
TM3DM8RG	4	Input	24Vdc / 7mA	Removable spring terminal block / 5.08 mm
	4	Relay outputs	24 Vdc / 240V ac 7A(common)/2A (output)	
TM3DM24R	16	Input	24Vdc / 7mA	Removable screw terminal block / 5.08 mm
	8	Relay outputs	24 Vdc / 240V ac 7A(common)/2A (output)	
TM3DM24RG	16	Input	24Vdc / 7mA	Removable spring terminal block / 5.08 mm
	8	Relay outputs	24 Vdc / 240V ac 7A(common)/2A (output)	

TM3 Analog module

Reference	Resolution	Channel Type: Channels	Mode	Terminal Type / Pitch
TM3AI2H	16bit, or 15bit + sign	Input：2	0...10 Vdc -10…+10 Vdc 0...20 mA 4...20 mA	Removable screw terminal block / 5.08 mm
TM3AI2HG				Removable spring terminal block / 5.08 mm
TM3TI4	16bit, or 15bit + sign	Input：2	0...10 Vdc -10…+10 Vdc 0...20 mA 4...20 mA Thermocouple PT100/1000 NI100/1000	Removable screw terminal block / 5.08 mm
TM3TI4G				Removable spring terminal block / 5.08 mm
TM3AQ2	16bit, or 15bit + sign	Output:2	0...10 Vdc -10…+10 Vdc 0...20 mA 4...20 mA	Removable screw terminal block / 5.08 mm
TM3AQ2G				Removable spring terminal block / 5.08 mm
TM3AM6	12bit, or 11bit + sign	Input:4	0...10 Vdc -10...+10 Vdc 0...20 mA 4...20 mA	Removable screw terminal block / 5.08 mm
TM3AM6G		Output:2		Removable spring terminal block / 5.08 mm
TM3TM3	16bit, or 15bit + sign	Input:2	0...10 Vdc -10...+10 Vdc 0...20 mA 4...20 mA Thermocouple PT100/1000 NI100/1000	Removable screw terminal block / 5.08 mm
TM3TM3G				Removable spring terminal block / 5.08 mm
	12bit, or 11bit + sign	Output:1	0...10 Vdc -10...+10 Vdc 0...20 mA 4...20 mA	

１０.２.２ **Environmental Characteristics**

	Minimum Specification	Tested Range	
Standard compliance	IEC/EN 61131-2	-	
Ambient operating temperature	-	Horizontal installation	–10...55 °C (14...131 °F)
	-	Vertical installation	–10...35 °C (14...95 °F)
Storage temperature		–25...70 °C (- 13...158 °F)	
Relative humidity	-	Transport and storage	10...95 % (non-condensing)
	-	Operation	10...95 % (non-condensing)
Degree of pollution	IEC/EN 60664-1	Pollution degree 2	
Degree of protection	IEC/EN 61131-2	IP20	
Corrosion immunity	-	Atmosphere free from corrosive gases	
Operating altitude	-	0...2000 m (0...6560 ft)	
Storage altitude	-	0...3000 m (0...9843 ft)	
Vibration resistance	IEC/EN 61131-2	Panel mounting or mounted on a top hat section rail (DIN rail)	10 mm (0.39 in) fixed amplitude from 5...8.7 Hz 29.4 m/s2 (96.45 ft/s2) (3 gn) fixed acceleration from 8.7...150 Hz
Mechanical shock resistance	-	15gn(147 m/s2 or 482.28 ft/s2)、11ms	

10.2.3 TWDFCW** Cable

Reference	Description	Details	Length
TWDFCW30K	Digital I/O cables with free wires for 20-pin Modular controller	Cable equipped at a one end with an HE10 connector. (AWG 22 / 0.34 mm2).	3 m (9.84 ft)
TWDFCW50K			5 m (16.4 ft)

The following table provides specifications for the TWDFCW30K/50K with free wires for 20-pin connectors (HE10 or MIL20):

Cable illustration	Pin Connector	Wire Color
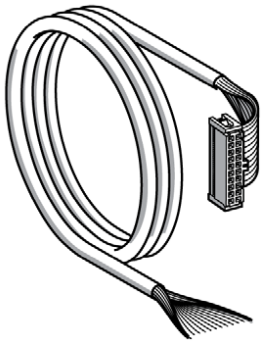	1	White
	2	Brown
	3	Green
	4	Yellow
	5	Grey
	6	Pink
	7	Blue
	8	Red
	9	Black
	10	Violet
	11	Grey and Pink
	12	Red and blue
	13	White and green
	14	Brown and green
	15	White and yellow
	16	Yellow and brown
	17	White and grey
	18	Grey and brown
	19	White and pink
	20	Pink and brown

Telefast Pre-Wiring Sub-bases

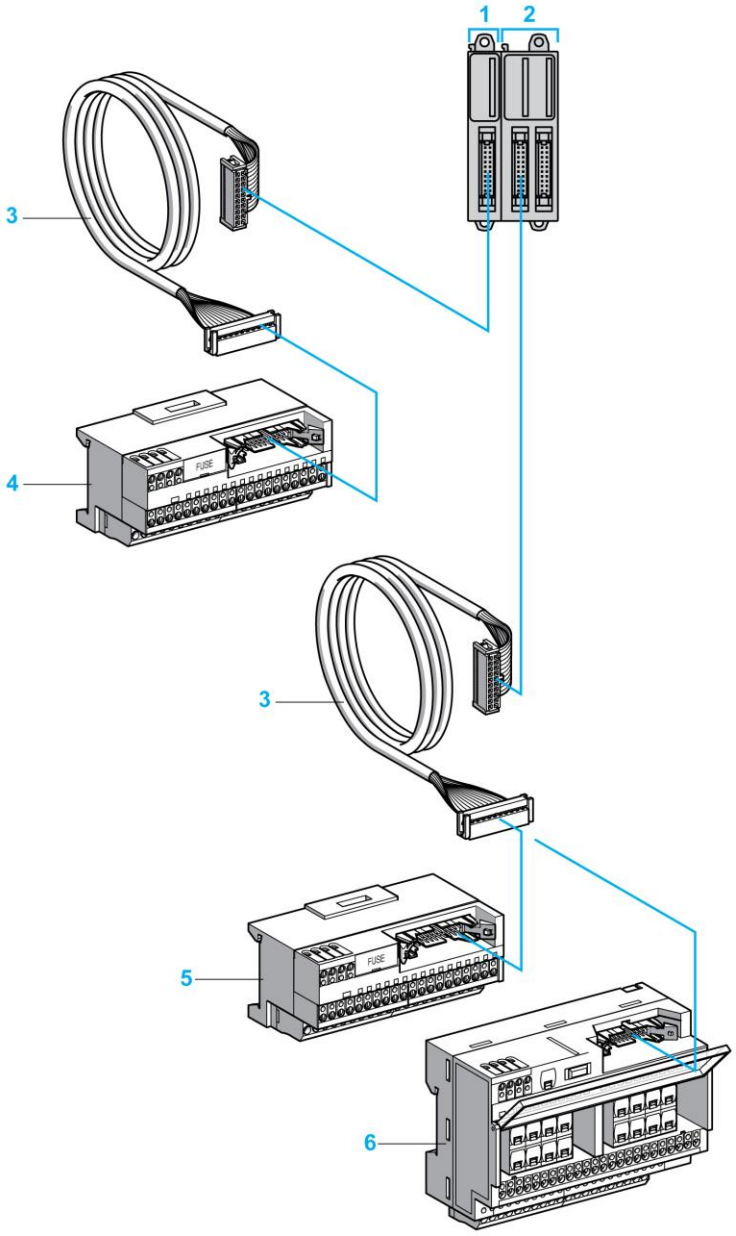

1 TM3DI16K / TM3DI32K

2 TM3DQ16TK / TM3DQ32TK

3 Cable equipped with a 20-way HE 10 connector at each end.

4 16 channel sub-base for input extension modules.

5–6 16 channel sub-base for output extension modules.

10.3 DIO Input module

10.3.1 TM3DI8 / TMDI8G, TM3DI16 / TM3DI16G

TM3DI8 / TM3DI8G：8-point Input Sink/Source Common Type I/O Unit

TM3DI16 / TM3DI16G：16-point Input Sink/Source Common Type I/O Unit

Characteristic		TM3DI8 / TM3DI8G	TM3DI16 / TM3DI16G
Number of input channels		8 inputs	16 inputs
Number of channels groups		1 common line on three terminals for 8 channels	1 common line on 4 terminals (2 per connector) for 16 channels
Input Type		Type 1 (IEC/EN 61131-2)	
Logic type		Sink / Source	
Rated input voltage		24Vdc	
Input voltage range		19.2-28.8 Vdc	
Rated input current		7mA	
Input impedance		3.4kΩ	
Input limit values	Voltage at state 1	> 15 Vdc (15...28.8 Vdc)	
	Voltage at state 0	< 5 Vdc (0...5 Vdc)	
	Current at state 1	> 2.5 mA	
	Current at state 0	<1 mA	
On-time		SV *1 < 2.0 4 ms SV *1 ≥ 2.0 100 μs	
Off time			
Isolation	Between input and internal logic	500Vac	
	Between input groups	N/A	
Connector	Removable screw terminal block	TM3DI8	TM3DI16
	Removable spring terminal block	TM3DI8G	TM3DI16G
Connector insertion/removal durability		Over 100 times	
Current draw on 5 Vdc internal bus		22 mA (all inputs on)	34 mA (all inputs on)
		5 mA (all inputs off)	5 mA (all inputs off)
Current draw on 24 Vdc internal bus		0 mA (all inputs on)	
		0 mA (all inputs off)	

Dimension & Wiring Diagram (TM3DI8 / TM3DI8G)

Dimensions	LED	Color	Green
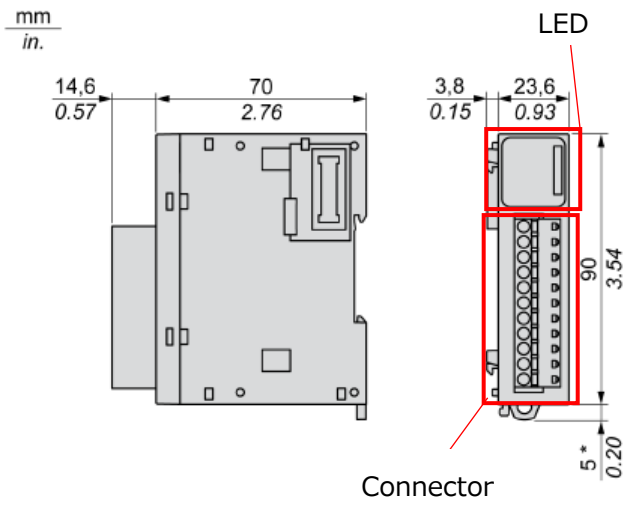		Status LED	
		On: Activated Off: Disactivated	
	Connector 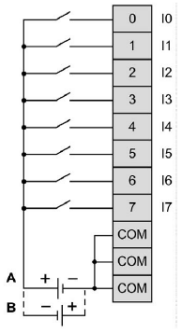	A: Sink wiring (positive logic) B: Source wiring (negative logic)	

Dimension & Wiring Diagram (TM3DI16 / TM3DI16G)

Connector	LED	Color	Green
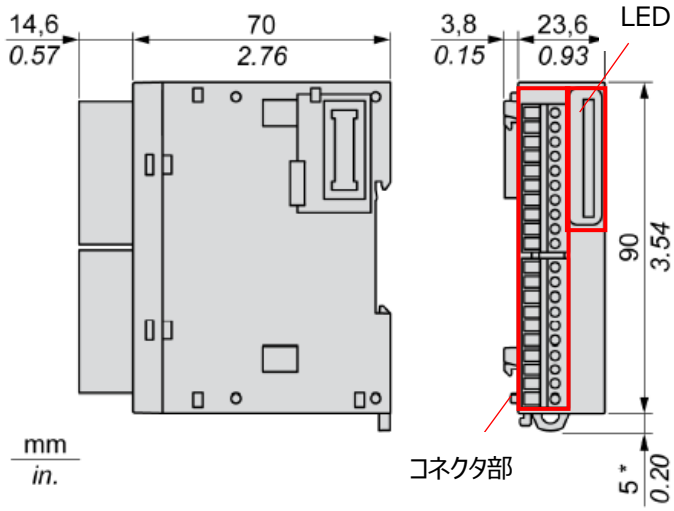	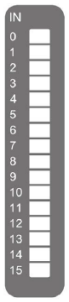	Status LED	
		On: Activated Off: Disactivated	
	Connector 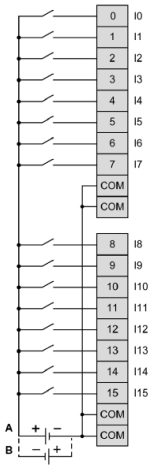	A: Sink wiring (positive logic) B: Source wiring (negative logic)	

10.4 DIO Output Module

10.4.1 TM3DQ8R / TM3DQ8RG, TM3DQ16R / TM3DQ16RG

TM3DQ8R / TM3DQ8RG：8-point Relay Output/2 Common Type I/O Unit

TM3DQ16R / TM3DQ16RG：16-point Relay Output/2 Common Type I/O Unit

Characteristic		TM3DQ8R / TM3DQ8RG	TM3DQ16R /TM3DQ16RG
Number of output channels		8 output	16 output
Number of channel groups		2 common lines, one for each group of 4 channels	2 common lines, one on 2 terminals for each group of 8 channels
Output type		Relay	
Rated output voltage		24Vdc, 240Vac	
Maximum voltage		30Vdc, 264Vac	
Minimum switching load		10mA / 5Vdc	
Maximum output current		2 A per output	
		7A per common	
Turn on time		Max. 10ms	
Turn off time		Max. 10ms	
Contact resistance		30mΩ max	
Mechanical life		20 million operations	
Connector	Removable screw terminal block	TM3DQ8R	TM3DQ16R
	Removable spring terminal block	TM3DQ8RG	TM3DQ16RG
Isolation	Between output and internal logic	500 Vac	
	Between output groups	1500 Vac	
Current draw on 5 Vdc internal bus		22 mA (all outputs on)	37 mA (all outputs on)
		5 mA (all outputs off)	5 mA (all outputs off)
Current draw on 24 Vdc internal bus		40 mA (all outputs on)	77 mA (all outputs on)
		0 mA (all outputs off)	0 mA (all outputs off)

- Power Limitation

This table describes the power limitations of the TM3DQ8R / TM3DQ8RG expansion module depending on the voltage, the type of load, and the number of operations required.

These expansion modules do not support capacitive loads.

Voltage	24 Vdc	120 Vac	240 Vac	Number of operations
Power of resistive loads AC-12	-	240 VA 80 VA	480 VA 160 VA	100,000 300,000
Power of inductive loads AC-15 (cos ϕ = 0.35)	-	60 VA 18 VA	120 VA 36 VA	100,000 300,000
Power of inductive loads AC-14 (cos ϕ = 0.7)	-	120 VA 36 VA	240 VA 72 VA	100,000 300,000
Power of resistive loads DC-12	48W 16W	-	-	100,000 300,000
Power of inductive loads DC-13 L/R = 7 ms	24W 7.2W	-	-	100,000 300,000

Dimension & wiring Diagram (TM3DQ8R / TM3DQ8RG)

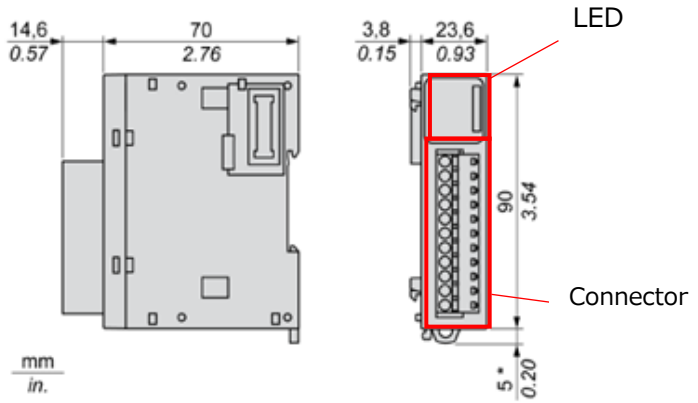

LED

Color	Green
Status LED	
On: Activated Off: Disactivated	

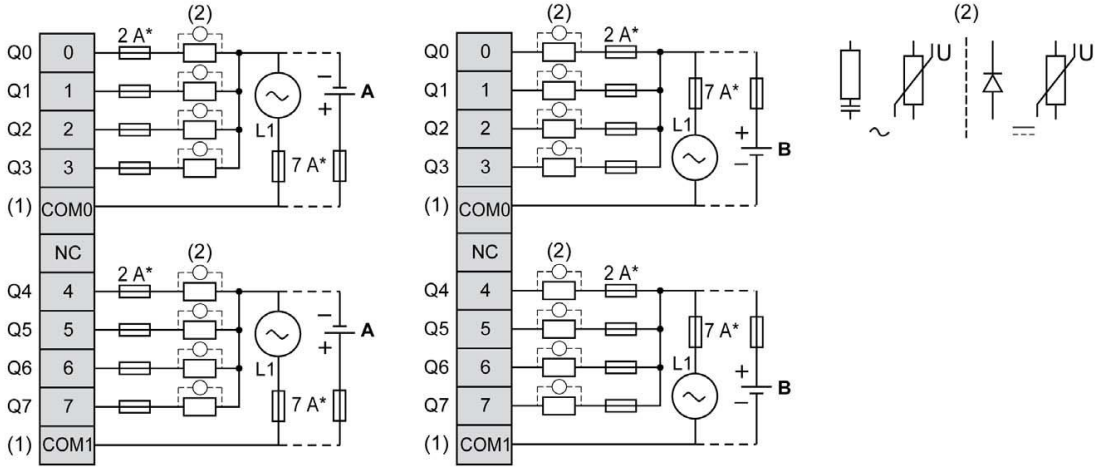

(1) The COM0 and COM1 terminals are not connected internally

(2) To improve the lifetime of the contacts, and to protect from potential inductive load damage, connect a freewheeling diode in parallel to each inductive DC load or an RC snubber in parallel of each inductive AC load,

or a varistor on either type of load.

A Source wiring (positive logic)

B Sink wiring (negative logic)

Dimension & wiring Diagram (TM3DQ16R / TM3DQ16RG)

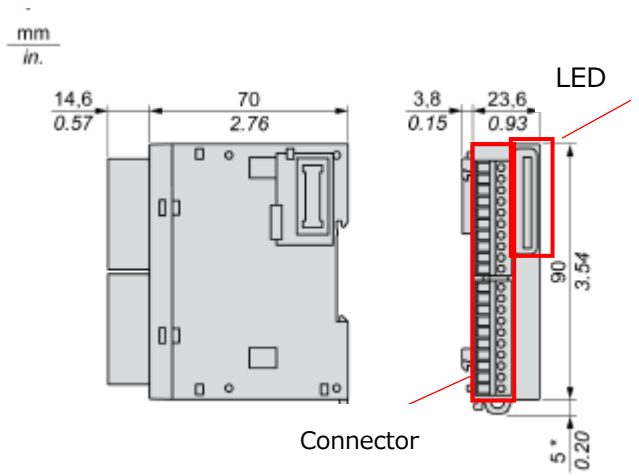

LED

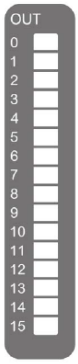

Color	Green
Status LED	
On: Activated Off: Disactivated	

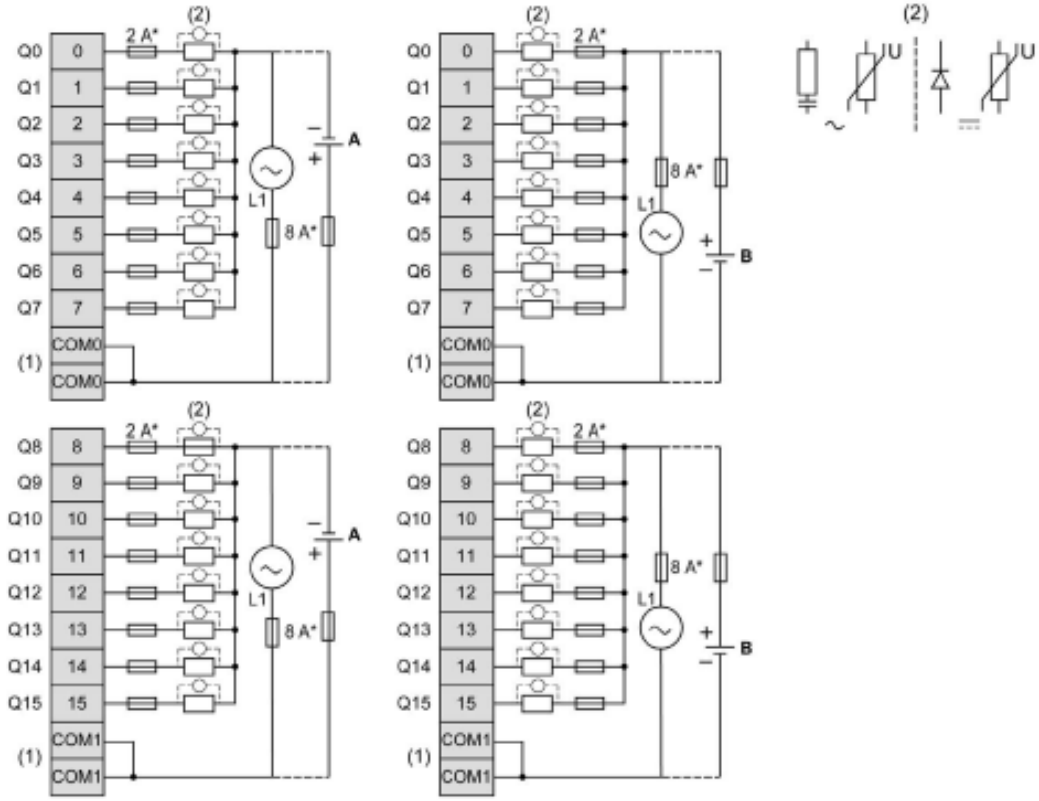

(1) The COM0 and COM1 terminals are not connected internally

(2) To improve the lifetime of the contacts, and to protect from potential inductive load damage, connect a freewheeling diode in parallel to each inductive DC load or an RC snubber in parallel of each inductive AC load, or a varistor on either type of load.

A Source wiring (positive logic)

B Sink wiring (negative logic)

１０.４.２ **TM3DQ8U / TM3DQ8UG**

TM3DQ8U / TM3DQ8UG: 8-point transistor Output Sink Type I/O Unit

Characteristic		Value
Number of output channels		8
Number of channel groups		1 common line for 8 channels
Output type		Transistor
Logic type		Sink
Rated output voltage		24Vdc
Maximum voltage range		19.2...28.8 Vdc
Minimum switching load		10mA / 5Vdc
Rated output voltage		0.5A max. per channel
Maximum output current		4A
Turn on time		450 us
Turn off time		450 us
Protection against short circuit		No (Fast external fuse required)
Short circuit output peak current		N/A
Clamping voltage		50Vdc
Connector insertion/removal durability		Over 100 times
Connector	Removable screw terminal block	TM3DQ8U
	Removable spring terminal block	TM3DQ8UG
Isolation	Between output and internal logic	500 Vac
	Between output groups	N/A
Current draw on 5 Vdc internal bus		17 mA (all outputs on)
		5 mA (all outputs off)
Current draw on 24 Vdc internal bus		8 mA (all outputs on)
		0 mA (all outputs off)

Dimension & Wiring diagram (TM3DQ8U / TM3DQ8UG)

<table>
<tr><td rowspan="3"> 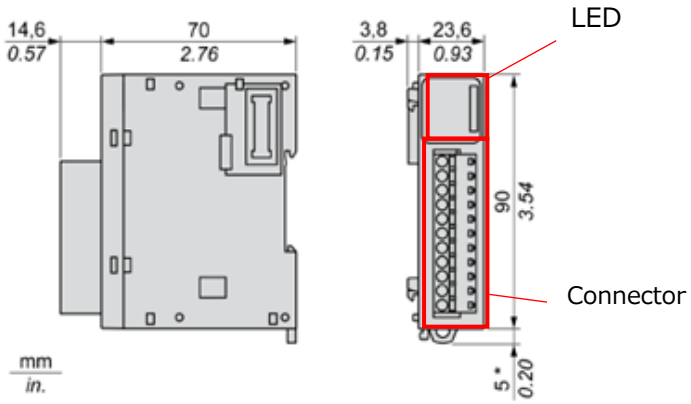
</td><td rowspan="3">LED
</td><td>Color</td><td>Green</td></tr>
<tr><td colspan="2">Status LED</td></tr>
<tr><td colspan="2">On: Activated
Off: Disactivated</td></tr>
<tr><td colspan="4"> 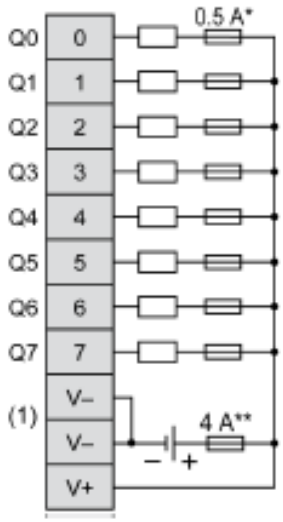
</td><td colspan="2">* Type T fuse
** Type F fuse
(1) The V- terminals are connected internally.</td></tr>
<tr><td colspan="6">The 24 Vdc power supplies must be rated at least Protective Extra Low Voltage (PELV) according to IEC 61140. These power supplies are isolated between the electrical input and output circuits of the power supply</td></tr>
</table>

10.4.3 TM3DQ8T / TM3DQ8TG

TM3DQ8T / TM3DQ8TG：8-point transistor Output Source Type I/O Unit

Characteristic		Value
Number of output channels		8
Number of channel groups		1 common line for 8 channels
Output type		Transistor
Logic type		Source
Rated output voltage		24Vdc
Maximum voltage range		19.2...28.8 Vdc
Rated output voltage		0.5A max. per channel
Maximum output current		4A
Voltage drop		0.4Vdc max.
Leakage current when switched off		0.1ma max.
Maximum power of filament lamp		12W
Inductive load		L/R=10ms
De-rating	- 10...55 °C (14...131 °F)	No de-rating
Turn on time		450 us
Turn off time		450 us
Protection against short circuit		Yes
Short circuit output peak current		1A typically
Automatic rearming after short circuit or overload		Yes, time depending on the expansion module temperature
Protection against reverse polarity		Yes
Clamping voltage		50Vdc typically
Switching frequency (Under resistive load)		100 Hz max
Connector insertion/removal durability		Over 100 times
Connector	Removable screw terminal block	TM3DQ8T
	Removable spring terminal block	TM3DQ8TG
Isolation	Between output and internal logic	500 Vac
	Between output groups	N/A
Current draw on 5 Vdc internal bus		17 mA (all outputs on)
		5 mA (all outputs off)
Current draw on 24 Vdc internal bus		8 mA (all outputs on)
		0 mA (all outputs off)

Dimension & Wiring Diagram (TM3DQ8T / TM3DQ8TG)

<table>
<tr><td rowspan="2"> 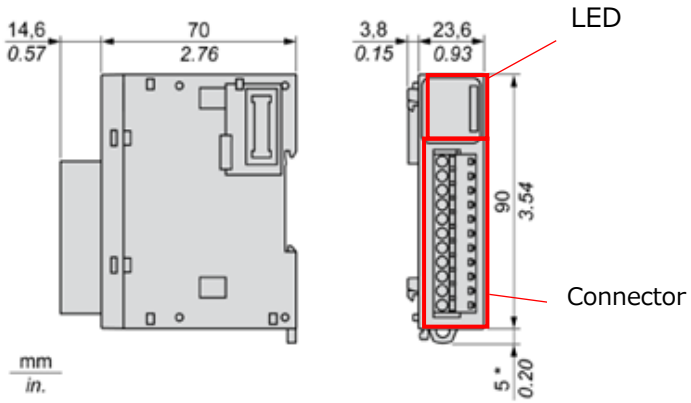
</td><td>LED
</td><td>Color | Green
Status LED
On: Activated
Off: Disactivated</td></tr>
<tr><td> 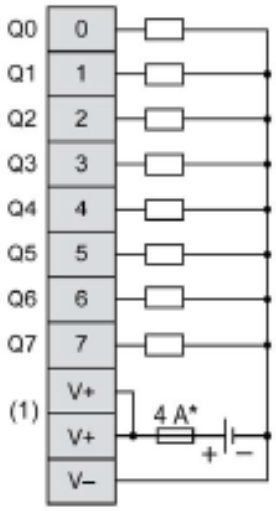
</td><td>* Type T fuse
(1) The V+ terminals are connected internally.</td></tr>
<tr><td colspan="3">The 24 Vdc power supplies must be rated at least Protective Extra Low Voltage (PELV) according to IEC 61140. These power supplies are isolated between the electrical input and output circuits of the power supply.</td></tr>
</table>

10.4.4 **TM3DQ16TK**

TM3DQ16TK: 16-point transistor Output Source Type I/O Unit

Characteristic		Value
Number of output channels		16
Number of channel groups		1 common line on 2 pins for 16 channels
Output type		Transistor
Logic type		Source
Rated output voltage		24Vdc
Maximum voltage range		19.2...28.8 Vdc
Rated output current		0.1A max. per channel
Maximum output current		2 A
Voltage drop		0.4Vdc max.
Leakage current when switched off		0.1mA max.
Maximum power of filament lamp		9.6W
Inductive load		L/R=10ms
De-rating	- 10...55 °C (14...131 °F)	No de-rating
Turn on time		450 us
Turn off time		450 us
Protection against short circuit		Yes
Short circuit output peak current		1 A typically
Automatic rearming after short circuit or overload		Yes, time depending on component temperature
Protection against reverse polarity		Yes
Clamping voltage		50Vdc typically
Switching frequency (Under resistive load)		100 Hz max
Connector insertion/removal durability		Over 100 times
Connector		HE10（MIL20）
Isolation	Between output and internal logic	500 Vac
	Between output groups	N/A
Current draw on 5 Vdc internal bus		20 mA (all outputs on)
		5 mA (all outputs off)
Current draw on 24 Vdc internal bus		16 mA (all outputs on)
		0 mA (all outputs off)

Dimension & Wiring Diagram (TM3DQ16TK)

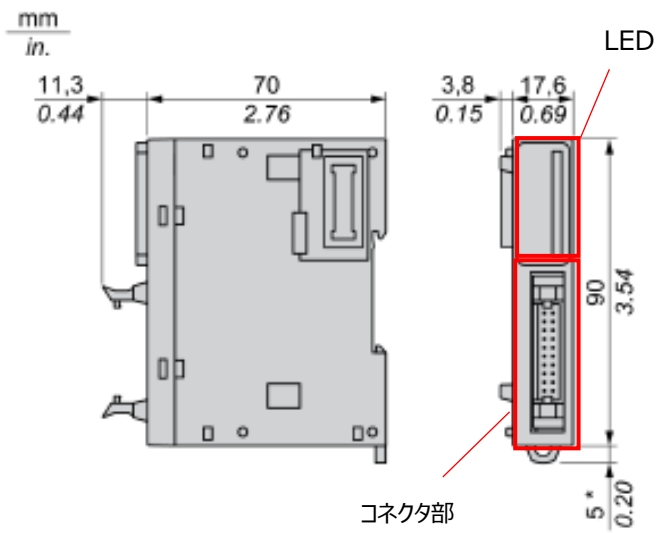

LED

Color	Green
Status LED	
On: Activated Off: Disactivated	

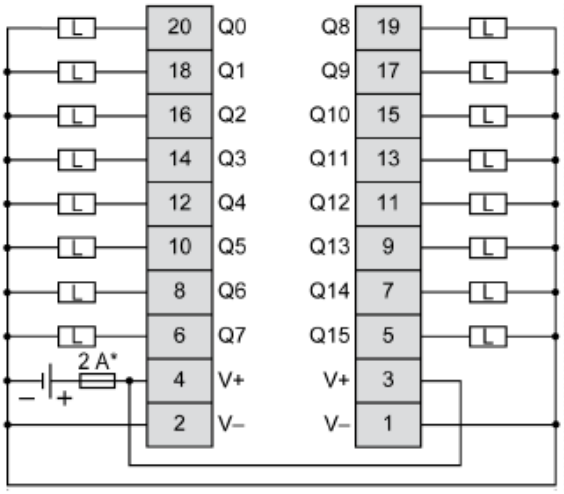

* Type T Fuse

The 24 Vdc power supplies must be rated at least Protective Extra Low Voltage (PELV) according to IEC 61140.

These power supplies are isolated between the electrical input and output circuits of the power supply.

For more information on the cable color for TWDFCW30K/TWDFCW50K, refer to TWDFCW••K Cable Description.

10.4.5 **TM3DQ16UK**

TM3DQ16UK: 16-point transistor Output Sink Type I/O Unit

Characteristic		Value
Number of output channels		16
Number of channel groups		1 common line on 2 pins for 16 channels
Output type		Transistor
Logic type		Sink
Rated output voltage		24Vdc
Maximum voltage range		19.2...28.8 Vdc
Rated output current		0.1A
Maximum output current		2 A
Voltage drop		0.4Vdc max.
Leakage current when switched off		0.1mA max.
Maximum power of filament lamp		2.4W
Inductive load		L/R=10ms
De-rating	- 10...55 °C (14...131 °F)	No de-rating
Turn on time		450 us
Turn off time		450 us
Protection against short circuit		No (fast external fuse required)
Short circuit output peak current		N/A
Automatic rearming after short circuit or overload		N/A
Protection against reverse polarity		Yes
Clamping voltage		50Vdc typically
Switching frequency (Under resistive load)		100 Hz max
Connector insertion/removal durability		Over 100 times
Connector		HE10（MIL20）
Isolation	Between output and internal logic	500 Vac
	Between output groups	N/A
Current draw on 5 Vdc internal bus		20 mA (all outputs on)
		5 mA (all outputs off)
Current draw on 24 Vdc internal bus		16 mA (all outputs on)
		0 mA (all outputs off)

Dimension & Wiring Diagram (TM3DQ16UK)

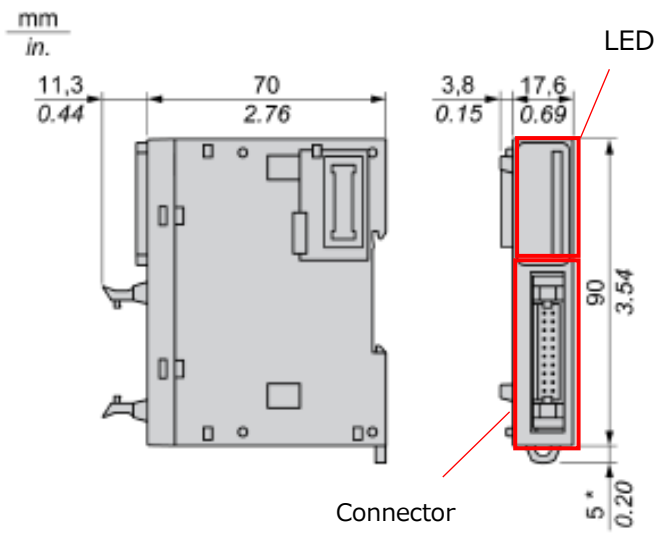

LED

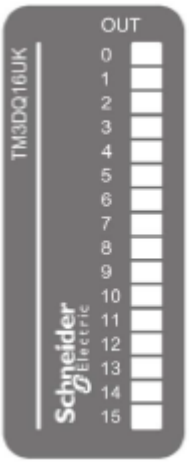

Color	Green
Status LED	
On: Activated Off: Disactivated	

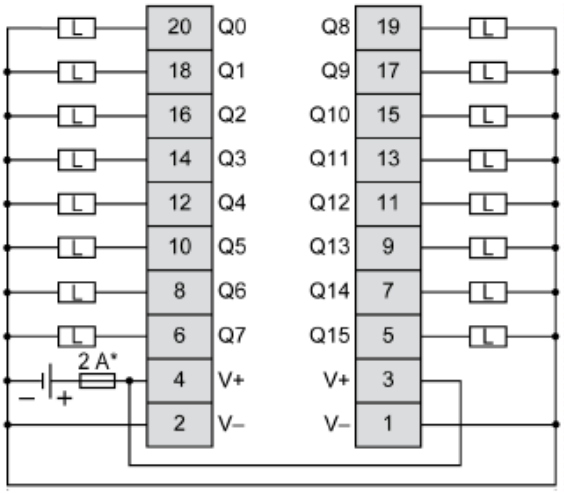

* Type T fuse

** Type F fuse

The 24 Vdc power supplies must be rated at least Protective Extra Low Voltage (PELV) according to IEC 61140.

These power supplies are isolated between the electrical input and output circuits of the power supply.

For more information on the cable color for TWDFCW30K/TWDFCW50K, refer to TWDFCW••K Cable Description.

10.5 DIO Input/Output Mixed module

10.5.1 TM3DM8R / TM3DM8RG

TM3DM8R / TM3DM8RG: 4-point Input Sink Source/4-point Relay Output/1-Common Type Input Output Mixed I/O Unit

Characteristic	Value
Removable screw terminal block	TM3DM8R
Removable spring terminal block	TM3DM8RG

Input characteristic

Characteristic		Value
Number of input channels		4 inputs
Number of channels groups		1 common line for 4 channels
Input Type		Type 1 (IEC/EN 61131-2)
Logic type		Sink / Source
Rated input voltage		24Vdc
Input voltage range		19.2-28.8 Vdc
Rated input current		7mA
Input impedance		3.4kΩ
Input limit values	Voltage at state 1	> 15 Vdc (15...28.8 Vdc)
	Voltage at state 0	< 5 Vdc (0...5 Vdc)
	Current at state 1	> 2.5 mA
	Current at state 0	<1 mA
On-time		SV *1 < 2.0 4 ms SV *1 ≥ 2.0 100 μs *2
Off time		
Isolation	Between input and internal logic	500Vac
	Between input group and output group	1500Vac
	Between input groups	N/A
Connector insertion/removal durability		Over 100 times
Current draw on 5 Vdc internal bus		24 mA (all inputs on)
		5 mA (all inputs off)
Current draw on 24 Vdc internal bus		20 mA (all inputs on)
		0 mA (all inputs off)

*1 SV refers to the version and is printed on the product label.

*2 The range depends on the configured filter value. If you use EcoStruxure Machine Expert - Basic, refer to the Modicon TM3 (EcoStruxure Machine Expert - Basic) Expansion Modules Configuration - Programming Guide. If you use EcoStruxure Machine Expert, refer to the Modicon TM3 Expansion Modules - Programming Guide.

Output characteristic

Characteristic		Value
Number of output channels		4 outputs
Number of channel groups		1 common line for 4 channels
Output type		Relay
Rated output voltage		24Vdc, 240Vac
Maximum voltage		30Vdc, 264Vac
Minimum switching load		5 Vdc at 10 mA
Rated output current		2A
Maximum output current		2 A per output
		7A per common
Maximum output frequency		20 operations per minute
Turn on time		Max. 10ms
Turn off time		Max. 10ms
Contact resistance		30mΩ max
Mechanical life		20 million operations
Isolation	Between output and internal logic	500 Vac
	Between input group and output group	1500 Vac
	Between output groups	N/A
Current draw on 5 Vdc internal bus		24 mA (all outputs on)
		5 mA (all outputs off)
Current draw on 24 Vdc internal bus		20 mA (all outputs on)
		0 mA (all outputs off)

- Power Limitation

This table describes the power limitations of the TM3DQ8R / TM3DQ8RG expansion module depending on the voltage, the type of load, and the number of operations required.

These expansion modules do not support capacitive loads.

Voltage	24 Vdc	120 Vac	240 Vac	Number of operations
Power of resistive loads AC-12	-	240 VA 80 VA	480 VA 160 VA	100,000 300,000
Power of inductive loads AC-15 (cos ϕ = 0.35)	-	60 VA 18 VA	120 VA 36 VA	100,000 300,000
Power of inductive loads AC-14 (cos ϕ = 0.7)	-	120 VA 36 VA	240 VA 72 VA	100,000 300,000
Power of resistive loads DC-12	48W 16W	-	-	100,000 300,000
Power of inductive loads DC-13 L/R = 7 ms	24W 7.2W	-	-	100,000 300,000

Dimension & Wiring Diagram (TM3DM8R / TM3DM8RG)

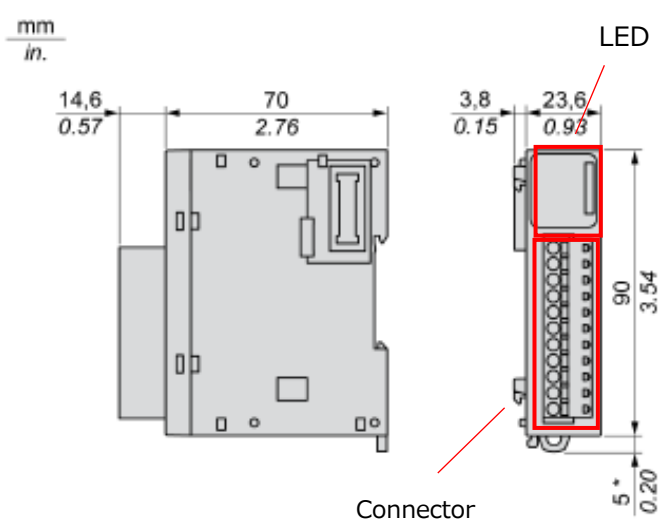

LED

Type	Operation
Input	On: Activated Off: Disactivated
Output	On: Activated Off: Disactivated

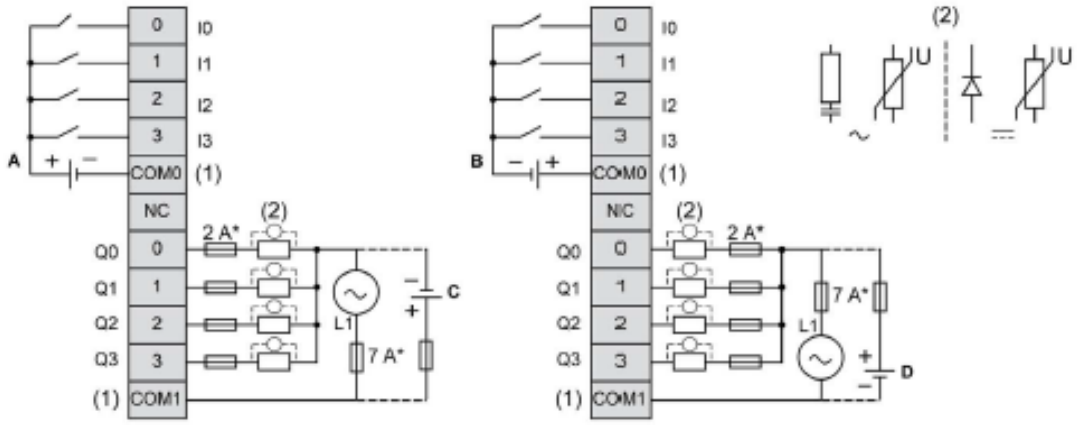

* Type T Fuse

(1) The COM0 and COM1 terminals are not connected internally.

(2) To improve the life time of the contacts, and to protect from potential inductive load damage, connect a freewheeling diode in parallel to each inductive DC load or an RC snubber in parallel of each inductive AC load, or a varistor on either type of load.

C Source wiring (positive logic)

D Sink wiring (negative logic)

NOTE: When you use the TM3 expansion module with a TM3 Ethernet bus coupler, you must connect an RC snubber in parallel of each inductive AC load.

The 24 Vdc power supplies must be rated at least Protective Extra Low Voltage (PELV) according to IEC 61140. These power supplies are isolated between the electrical input and output circuits of the power supply.

10.5.2 TM3DM24R / TM3DM24RG

TM3DM24R / TM3DM24RG:16-point Input Sink・Source /8-point Relay Output Type

Characteristic	Value
Removable screw terminal block	TM3DM24R
Removable spring terminal block	TM3DM24RG

Input characteristic

Characteristic		Value
Number of input channels		16 inputs
Number of channels groups		1 common line for 16 channels
Input Type		Type 1 (IEC/EN 61131-2)
Logic type		Sink / Source
Rated input voltage		24Vdc
Input voltage range		19.2-28.8 Vdc
Rated input current		7mA
Input impedance		3.4kΩ
Input limit values	Voltage at state 1	> 15 Vdc (15...28.8 Vdc)
	Voltage at state 0	< 5 Vdc (0...5 Vdc)
	Current at state 1	> 2.5 mA
	Current at state 0	<1 mA
On-time		SV *1 < 2.0 4 ms
Off time		SV *1 ≥ 2.0 100 μs *2
Isolation	Between input and internal logic	500Vac
	Between input group and output group	1500Vac
	Between input groups	N/A
Connector insertion/removal durability		Over 100 times
Current draw on 5 Vdc internal bus		24 mA (all inputs on)
		5 mA (all inputs off)
Current draw on 24 Vdc internal bus		20 mA (all inputs on)
		0 mA (all inputs off)

*1 SV refers to the version and is printed on the product label.

*2 The range depends on the configured filter value. If you use EcoStruxure Machine Expert - Basic, refer to the Modicon TM3 (EcoStruxure Machine Expert - Basic) Expansion Modules Configuration - Programming Guide. If you use EcoStruxure Machine Expert, refer to the Modicon TM3 Expansion Modules - Programming Guide.

Output characteristic

Characteristic		Value
Number of output channels		8 outputs
Number of channel groups		2 common line for 8 channels
Output type		Relay
Rated output voltage		24Vdc, 240Vac
Maximum voltage		30Vdc, 264Vac
Minimum switching load		5 Vdc at 10 mA
Rated output current		2A
Maximum output current		2 A per output
		7A per common
Maximum output frequency		20 operations per minute
Turn on time		Max. 10ms
Turn off time		Max. 10ms
Contact resistance		30mΩ max
Mechanical life		20 million operations
Isolation	Between output and internal logic	500 Vac
	Between input group and output group	1500 Vac
	Between output groups	N/A
Connector insertion/removal durability		Over 100 times
Current draw on 5 Vdc internal bus		42 mA (all outputs on)
		5 mA (all outputs off)
Current draw on 24 Vdc internal bus		39 mA (all outputs on)
		0 mA (all outputs off)

- Power Limitation

This table describes the power limitations of the TM3DQ8R / TM3DQ8RG expansion module depending on the voltage, the type of load, and the number of operations required.

These expansion modules do not support capacitive loads.

Voltage	24 Vdc	120 Vac	240 Vac	Number of operations
Power of resistive loads AC-12	-	240 VA 80 VA	480 VA 160 VA	100,000 300,000
Power of inductive loads AC-15 (cos ϕ = 0.35)	-	60 VA 18 VA	120 VA 36 VA	100,000 300,000
Power of inductive loads AC-14 (cos ϕ = 0.7)	-	120 VA 36 VA	240 VA 72 VA	100,000 300,000
Power of resistive loads DC-12	48W 16W	-	-	100,000 300,000
Power of inductive loads DC-13 L/R = 7 ms	24W 7.2W	-	-	100,000 300,000

Dimension

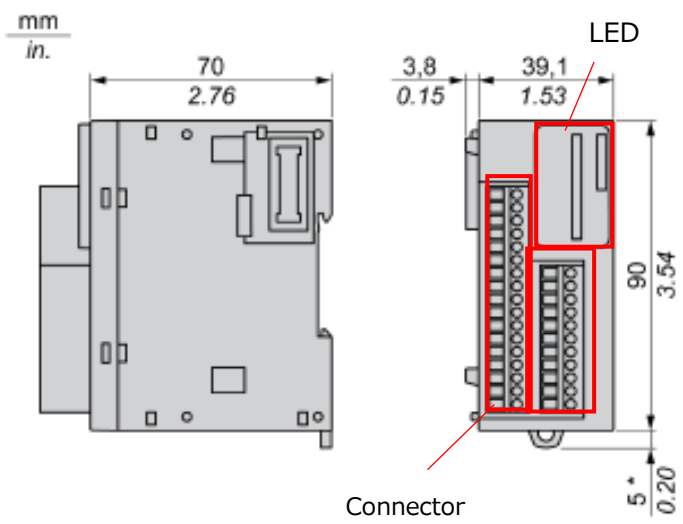

LED

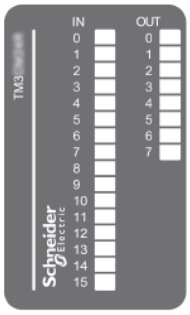

Type	Operation
Input (15-0)	On: Activated Off: Disactivated
Output (7-0)	On: Activated Off: Disactivated

Wiring Diagram

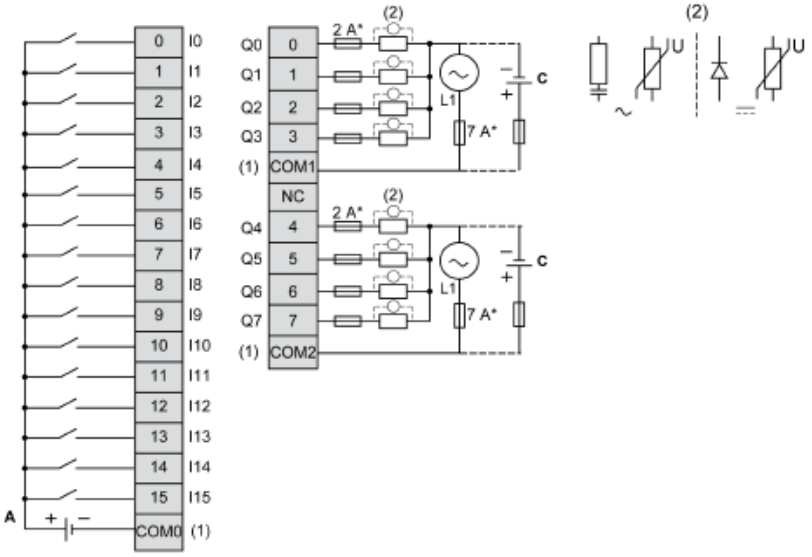

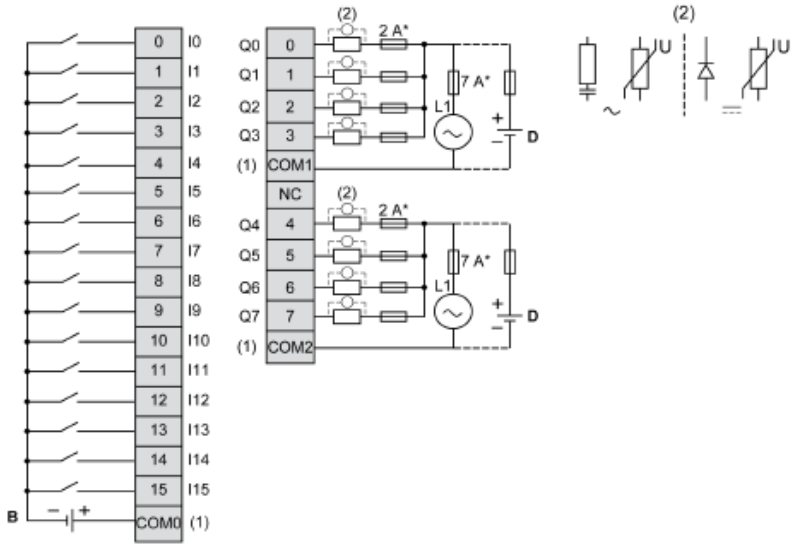

* Type T Fuse

(1) The COM0 and COM1 terminals are not connected internally.

(2) To improve the life time of the contacts, and to protect from potential inductive load damage, connect a freewheeling diode in parallel to each inductive DC load or an RC snubber in parallel of each inductive AC load, or a varistor on either type of load.

C Source wiring (positive logic)

D Sink wiring (negative logic)

NOTE: When you use the TM3 expansion module with a TM3 Ethernet bus coupler, you must connect an RC snubber in parallel of each inductive AC load.

The 24 Vdc power supplies must be rated at least Protective Extra Low Voltage (PELV) according to IEC 61140. These power supplies are isolated between the electrical input and output circuits of the power supply.

10.6 TM3 Analog Module

10.6.1 TM3AI2H / TM3AI2HG

TM3AI2H / TM3AI2HG: 2-point Analog Input Module

Characteristic	Value
Removable screw terminal block	TM3AI2H
Removable spring terminal block	TM3AI2HG

General Characteristics

Characteristic	Value
Rated power supply voltage	24 Vdc
Power supply range	20.4...28.8 Vdc
Connector insertion/removal durability	100 times minimum
Current draw on 5 Vdc internal bus	30 mA (all outputs on) 30 mA (all outputs off)
Current draw on 24 Vdc internal bus	0 mA
Current draw on external 24 Vdc	25 mA (all outputs on) 25 mA (all outputs off)

Input Characteristics

Characteristic	Value	
	Voltage Input	Current Input
Input range	0 ...10Vdc -100 ...+10Vdc	0 ... 20mA 4 ... 20mA
Input impedance	1MΩ min	10Ω max
Input channels	2 channels	
Sample duration time	1ms	
Input type	Single-ended input	
Operation mode	Self-scan	
Conversion mode	Sigma delta ADC	
Max accuracy at ambient 25 °C (77 °F)	±0.1 % of full scale	
Temperature drift	±0.006 % of full scale	
Repeatability after stabilization time	±0.5 % of full scale	
Nonlinearity	±0.01 % of full scale	
Maximum input deviation	±1.0 % of full scale	
Resolution	16 bits, or 15 bits + sign (65536 points)	

Input Characteristics (Continue)

Characteristic		Value	
		Voltage Input	Current Input
Input value of LSB		0.153 mV (range 0 ... 10 Vdc) 0.305 mV (range –10 ... +10 Vdc)	0.305 µA (range 0...120 mA) 0.244 µA (range 4 ...120 mA)
Data type in application program		-32768 ... 32767	
Input data out of range detection		Yes	
Noise resistance	Maximum temporary deviation during perturbations	±4 % maximum when EMC perturbation is applied to the power and I/O wiring	
	Cable	Twisted pair shielded cable, max 30 m	
	Crosstalk	1LSB max	
Isolation	Between output and internal logic	1500 Vac	
	Between input group and output group	500 Vac	
Maximum continuous allowed overload (no damage		13 Vdc	40mA
Input filter		Software filter: 0...10 s (per 0.01 s unit)	
Behavior when external power is off		Input value is 0 The External power supply error status bit in the controller is ON.	

Dimension & Wiring Diagram (TM3AI2H / TM3AI2HG)

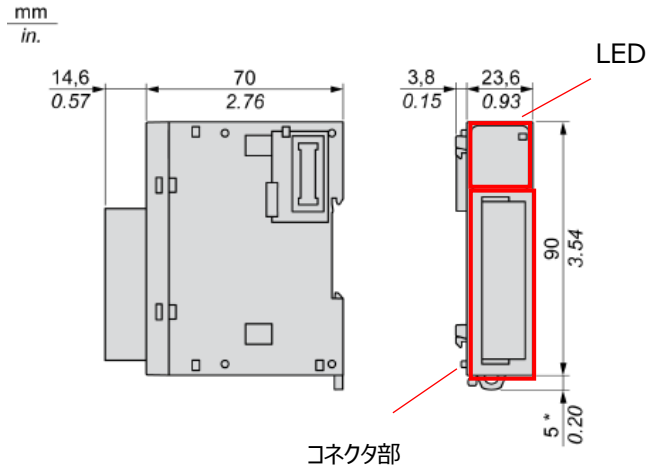

LED

Color	Green
Status LED	
On: Activated Off: Disactivated	

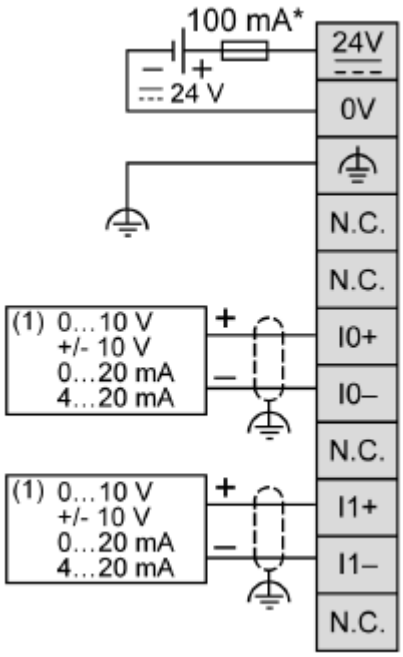

* Type T fuse

(1) Current/Voltage analog output device

Do not connect wires to unused terminals and/or terminals indicated as “No Connection (N.C.)”.

１０.６.２ **TM3TI4 / TM3TI4G**

TM3TI4 / TM3TI4G: 4-point Voltage・Current・Temp (Pt100, Pt1000、Ni100, Ni1000) Input Module

Characteristic	Value
Removable screw terminal block	TM3AI4
Removable spring terminal block	TM3AI4G

Main Characteristics

Characteristic	Value			
Number of input channels	4 Channels			
Rated power supply	24V dc			
Signal type	Voltage	Current	Thermocouple	3-wire-RTD
Input range	0 ... 10Vdc -10 ... +10Vdc	0...20 mA 4...20 mA	Type K, J, R, S, B, E, T, N, C	PT100, PT1000, NI100, NI1000
Resolution max	16 bits, or 15 bits + sign (65536 points)			

General Characteristics

Characteristic	Value
Rated power supply voltage	24 Vdc
Power supply range	20.4...28.8 Vdc
Connector insertion/removal durability	100 times minimum
Current draw on 5 Vdc internal bus	40 mA (all outputs on) 40 mA (all outputs off)
Current draw on 24 Vdc internal bus	0 mA
Current draw on external 24 Vdc	35 mA (all outputs on) 40 mA (all outputs off)

Input Characteristics

<table>
<tr><th>Characteristic</th><th colspan="7">Value</th></tr>
<tr><td>Signal type</td><td>Voltage</td><td>Current</td><td colspan="2">Thermocouple</td><td colspan="2">3-wire-RTD</td></tr>
<tr><td rowspan="8">Input range</td><td rowspan="8">0...10Vdc
-10...+10Vdc</td><td rowspan="8">0...20 mA
4...20 mA</td><td>K</td><td>–200...1300 °C
(–328...2372 °F)</td><td>PT100</td><td>–200...850 °C
(–328...1562 °F)</td></tr>
<tr><td>J</td><td>–200...1000 °C
(–328...1832 °F)</td><td>PT1000</td><td>–200...1300 °C
(–328...1112 °F)</td></tr>
<tr><td>R</td><td>0...1760 °C
(323200 °F)</td><td>NI100</td><td>–60...1300 °C
(–76...356 °F)</td></tr>
<tr><td>S</td><td>0...1760 °C
(32...3200 °F)</td><td>NI1000</td><td>–60...180 °C
(–76...356 °F)</td></tr>
<tr><td>B</td><td>0...1820 °C
(–328...3308 °F)</td><td colspan="2" rowspan="5"></td></tr>
<tr><td>E</td><td>–200...800 °C
(–328...1472 °F)</td></tr>
<tr><td>T</td><td>–200...400 °C
(–328...752 °F)</td></tr>
<tr><td>N</td><td>–200...1300 °C
(–328...2372 °F)</td></tr>
<tr><td>C</td><td>0...2315 °C
(32...4199°F)</td></tr>
<tr><td>Input range</td><td>1MΩ min</td><td>50Ωmax</td><td colspan="4">1MΩ min</td></tr>
<tr><td>Sample duration time (software configurable)</td><td colspan="2">10 ms or 100 ms per enabled channel</td><td colspan="4">100 ms per enabled channel</td></tr>
<tr><td>Input type</td><td colspan="7">Single-ended input. Use only isolated thermocouples. All the shields of the sensor cables must be referenced to the logic controller ground</td></tr>
<tr><td>Operation mode</td><td colspan="7">Self-scan</td></tr>
<tr><td>Conversion mode</td><td colspan="7">Sigma delta ADC</td></tr>
</table>

Input Characteristics

<table>
<tr><th>Characteristic</th><th colspan="6">Value</th></tr>
<tr><td>Signal type</td><td>Voltage</td><td>Current</td><td colspan="2">Thermocouple</td><td colspan="2">3-wire-RTD</td></tr>
<tr><td rowspan="7">Max accuracy at ambient 25 °C (77 °F)</td><td colspan="6">±0.2 % of full scale</td></tr>
<tr><td colspan="2">-</td><td colspan="2">Cold junction accuracy
±4.0 °C (±7.2 °F)</td><td colspan="2" rowspan="6"></td></tr>
<tr><td colspan="2"></td><td colspan="2">Except:</td></tr>
<tr><td colspan="2"></td><td>R
S</td><td>±6.0 °C
(0...200 °C)
(±10.8 °F
(32...392 °F))</td></tr>
<tr><td colspan="2"></td><td>B</td><td>Not available
(0...300 °C
(32...572 °F))</td></tr>
<tr><td colspan="2"></td><td>K
J
E
T
N</td><td>±0.4 % of full scale under 0 °C
(32 °F)</td></tr>
<tr><td>Temperature drift</td><td colspan="6">±0.01 % of full scale</td></tr>
<tr><td>Repeatability after stabilization time</td><td colspan="6">±0.5 % of full scale</td></tr>
<tr><td>Nonlinearity</td><td colspan="6">±0.2 % of full scale</td></tr>
<tr><td>Maximum input deviation</td><td colspan="6">±1.0 % of full scale</td></tr>
<tr><td>Resolution</td><td colspan="2">16 bits, or 15 bits + sign (65536 points)</td><td>K
J
R
S
B
E
T
N
C</td><td>15000 points
12000 points
17600 points
17600 points
18200 points
10000 points
6000 points
15000 points
23150 points</td><td>PT100
PT1000
NI100
NI1000</td><td>10500 points
8000 points
2400 points
2400 points</td></tr>
</table>

Input Characteristics (Continue)

Characteristic		Value			
Signal type		Voltage	Current	Thermocouple	3-wire-RTD
Data type in application program		Scalable from –32768 to 32767			
Input data out of range detection		Yes			
Noise resistance	Maximum temporary deviation during perturbations	±4 % maximum when EMC perturbation is applied to the power and I/O wiring			
	Cable	Twisted pair shielded cable, max 30 m			
	Crosstalk	1LSB max			
Isolation	Between output and internal logic	1500 Vac			
	Between input group and output group	500 Vac			
	Between inputs	Not isolated			
Maximum continuous allowed overload (no damage)		13 Vdc	40mA	N/A	
Input filter		Software filter: 0...10 s (per 0.01 s unit)			
Behavior when temperature sensor is broken		N/A		Input value is highest limit value Highest limit flag is ON	
Behavior when external power is off		Input value is 0		Input value is highest limit value	
		The External power supply error status bit in the controller is ON.			

Dimension & Wiring Diagram

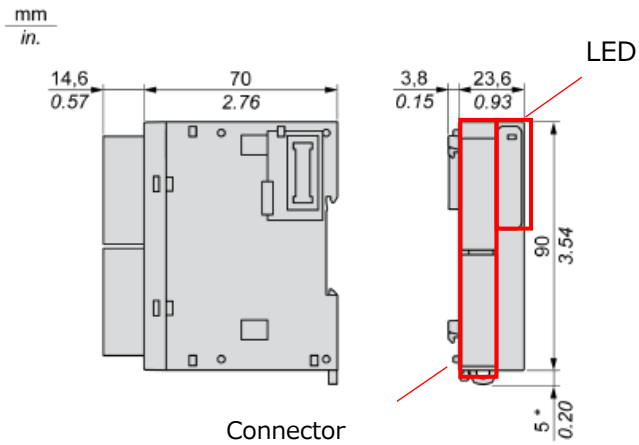

LED

Color	Green
Status LED	
On: Activated Off: Disactivated	

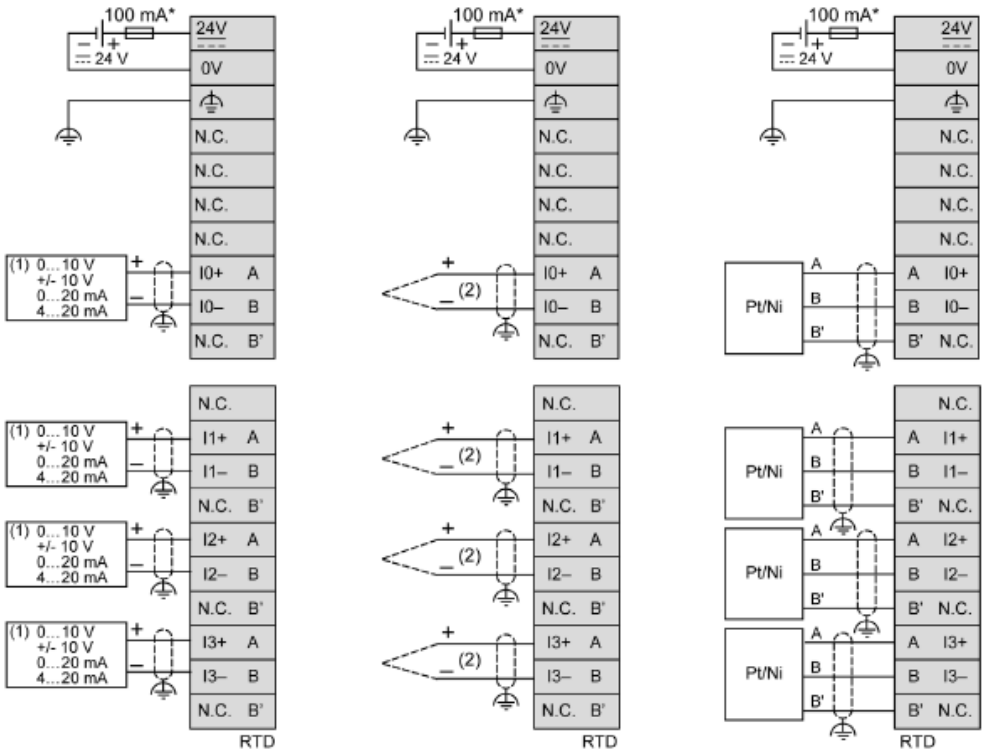

* Type T fuse

(1) Current/Voltage analog output device

(2) Electrically isolated thermocouple only

RTD (A, B, B'): Resistance Temperature Detector

Do not connect wires to unused terminals and/or terminals indicated as “No Connection (N.C.)”.

10.6.3 TM3AQ2 / TM2AQ2G

TM3AQ2 / TM3AQ2G: 2-point Analog Output Type Expansion Unit

Characteristic	Value
Removable screw terminal block	TM3AQ2
Removable spring terminal block	TM3AQ2G

General Characteristics

Characteristic	Value
Rated power supply voltage	24 Vdc
Power supply range	20.4...28.8 Vdc
Connector insertion/removal durability	100 times minimum
Current draw on 5 Vdc internal bus	30 mA (all outputs on) 40 mA (all outputs off)
Current draw on 24 Vdc internal bus	0 mA
Current draw on external 24 Vdc	30 mA (all outputs on) 70 mA (all outputs off)

Output Characteristics

Characteristic		Value	
		Voltage Output	Current Output
Output range		0...10Vdc -10...+10Vdc	0...20mA 4...20mA
Load impedance		1kΩ min	300Ω max
Application load type		Resistive load	
Setting time		1ms	
Max accuracy at ambient 25 °C (77 °F)		±0.1 % of full scale	
Temperature drift		±0.006 % of full scale	
Repeatability after stabilization time		±0.4 % of full scale	
Nonlinearity		±0.01 % of full scale	
Maximum input deviation		±1.0 % of full scale	
Output ripple		20 mV max	
Overshoot		0%	
Maximum output deviation		±1.0 % of full scale	
Resolution		12 bits, or 11 bits + sign (4096 points)	
Input value of LSB		2.44mV (range 0...10 Vdc) 2.88mV (range –10...+10 Vdc)	4.88µA (range 0...20 mA) 3.91µA (range 4...20 mA)
Data type in application program		0...4095 (range 0...10 Vdc) –2048...+2047 (range –10...+10 Vdc)	0...4095
		Scalable from –32768 to 32767	
Input data out of range detection		Yes	
Noise resistance	Maximum temporary deviation during perturbations	±4 % maximum when EMC perturbation is applied to the power and I/O wiring	
	Cable	Twisted pair shielded cable, max 30 m	
	Crosstalk	1LSB max	
Isolation	Between output and internal logic	1500 Vac	
	Between input group and output group	500 Vac	
Output protection		Short- circuit protection	Open- circuit protection
Behavior when external power is off		Input value is 0 The External power supply error status bit in the controller is ON.	

Dimension & Wiring Diagram (TM3AQ2 / TM2AQ2G)

<table>
<tr>
<td colspan="2"> 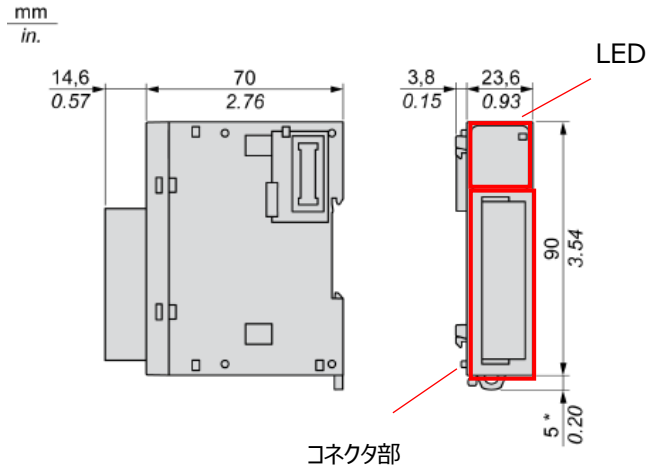
</td>
<td>LED
</td>
<td>Color</td>
<td>Green</td>
</tr>
<tr>
<td colspan="2"></td>
<td colspan="2">Status LED</td>
</tr>
<tr>
<td colspan="2"></td>
<td colspan="2">On: Activated
Off: Disactivated</td>
</tr>
<tr>
<td colspan="2"> 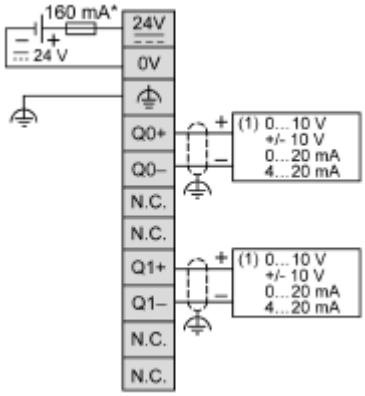
</td>
<td colspan="3">* Type T fuse
(1) Voltage/current pre-actuator</td>
</tr>
<tr>
<td colspan="5">Do not connect wires to unused terminals and/or terminals indicated as “No Connection (N.C.)”.</td>
</tr>
</table>

10.6.4 TM3TM3 / TM3TM3G

TM3TM3 / TM3TM3G: 2-point Analog Input/1-point Analog Output Module

- 2 input channels 16 bits (Voltage, current, thermocouple, 3-wire-RTD)
- 1 output channel 12 bits (Voltage, current)

Characteristic	Value
Removable screw terminal block	TM3TM3
Removable spring terminal block	TM3TM3G

Main Characteristics

Characteristic	Value					
Number of input channels	2 input				1 output	
Rated power supply	24V dc					
Signal type	Voltage	Current	Thermocouple	3-wire-RTD	Voltage	Current
Input range	0 ... 10Vdc -10 ... +10Vdc	0...20 mA 4...20 mA	Type K, J, R, S, B, E, T, N, C	PT100, PT1000, NI100, NI1000	0 ... 10Vdc -10 ... +10Vdc	0...20 mA 4...20 mA
Resolution max	16 bits, or 15 bits + sign				12bit (4096 point)	

General Characteristics

Characteristic	Value
Rated power supply voltage	24 Vdc
Power supply range	20.4...28.8 Vdc
Connector insertion/removal durability	100 times minimum
Current draw on 5 Vdc internal bus	55 mA (all outputs on) 60 mA (all outputs off)
Current draw on 24 Vdc internal bus	0 mA
Current draw on external 24 Vdc	55 mA (all outputs on) 80 mA (all outputs off)

Input Characteristics

<table>
<tr><th>Characteristic</th><th colspan="6">Value</th></tr>
<tr><td>Signal type</td><td>Voltage</td><td>Current</td><td colspan="2">Thermocouple</td><td colspan="2">3-wire-RTD</td></tr>
<tr><td rowspan="8">Input range</td><td rowspan="8">0...10Vdc
-10...+10Vdc</td><td rowspan="8">0...20 mA
4...20 mA</td><td>K</td><td>–200...1300 °C
(–328...2372 °F)</td><td>PT100</td><td>–200...850 °C
(–328...1562 °F)</td></tr>
<tr><td>J</td><td>–200...1000 °C
(–328...1832 °F)</td><td>PT1000</td><td>–200...1300 °C
(–328...1112 °F)</td></tr>
<tr><td>R</td><td>0...1760 °C
(323200 °F)</td><td>NI100</td><td>–60...1300 °C
(–76...356 °F)</td></tr>
<tr><td>S</td><td>0...1760 °C
(32...3200 °F)</td><td>NI1000</td><td>–60...180 °C
(–76...356 °F)</td></tr>
<tr><td>B</td><td>0...1820 °C
(–328...3308 °F)</td><td></td><td></td></tr>
<tr><td>E</td><td>–200...800 °C
(–328...1472 °F)</td><td></td><td></td></tr>
<tr><td>T</td><td>–200...400 °C
(–328...752 °F)</td><td colspan="2" rowspan="3"></td></tr>
<tr><td>N</td><td>–200...1300 °C
(–328...2372 °F)</td></tr>
<tr><td>C</td><td>0...2315 °C
(32...4199°F)</td></tr>
<tr><td>Input range</td><td>1MΩ min</td><td>50Ωmax</td><td colspan="4">1MΩ min</td></tr>
<tr><td>Sample duration time</td><td colspan="2">Software configurable: 10 ms or 100 ms per enabled channel</td><td colspan="4">100 ms per enabled channel</td></tr>
<tr><td>Input type</td><td colspan="6">Single-ended input.</td></tr>
<tr><td>Operation mode</td><td colspan="6">Self-scan</td></tr>
<tr><td>Conversion mode</td><td colspan="6">Sigma delta ADC</td></tr>
</table>

Input Characteristics

<table>
<tr><th>Characteristic</th><th colspan="6">Value</th></tr>
<tr><td>Signal type</td><td>Voltage</td><td>Current</td><td colspan="2">Thermocouple</td><td colspan="2">3-wire-RTD</td></tr>
<tr><td rowspan="5">Max accuracy at ambient 25 °C (77 °F)</td><td colspan="2" rowspan="5">±0.1 % of full scale</td><td colspan="2">±0.1 % of full scale</td><td colspan="2" rowspan="2">±0.1 % of full scale</td></tr>
<tr><td colspan="2">Except:</td></tr>
<tr><td>R
S</td><td>±6.0 °C
(0...200 °C)
(±10.8 °F
(32...392 °F))</td><td colspan="2" rowspan="3"></td></tr>
<tr><td>B</td><td>Not available
(0...300 °C
(32...572 °F))</td></tr>
<tr><td>K
J
E
T
N</td><td>±0.4 % of full scale under 0 °C
(32 °F)</td></tr>
<tr><td>Temperature drift</td><td colspan="6">±0.006 % of full scale</td></tr>
<tr><td>Repeatability after stabilization time</td><td colspan="6">±0.5 % of full scale</td></tr>
<tr><td>Nonlinearity</td><td colspan="6">±0.1 % of full scale</td></tr>
<tr><td>Maximum input deviation</td><td colspan="6">±1.0 % of full scale</td></tr>
<tr><td>Resolution</td><td colspan="2">16 bits, or 15 bits + sign (65536 points)</td><td>K
J
R
S
B
E
T
N
C</td><td>15000 points
12000 points
17600 points
17600 points
18200 points
10000 points
6000 points
15000 points
23150 points</td><td>PT100
PT1000
NI100
NI1000</td><td>10500 points
8000 points
2400 points
2400 points</td></tr>
<tr><td>Input value of LSB</td><td>0.15 mV (range 0...10 Vdc)
0.30 mV (range –10...+10 Vdc)</td><td>0.30 µA (range 0...20 mA)
0.244 µA (range 4...20 mA)</td><td colspan="4">0.1 °C (0.18 °F)</td></tr>
</table>

Input Characteristics (Continue)

Characteristic		Value			
Signal type		Voltage	Current	Thermocouple	3-wire-RTD
Data type in application program		Scalable from –32768 to 32767			
Input data out of range detection		Yes			
Noise resistance	Maximum temporary deviation during perturbations	±4 % maximum when EMC perturbation is applied to the power and I/O wiring			
	Cable	Twisted pair shielded cable, max 30 m			
	Crosstalk	1LSB max			
Isolation	Between output and internal logic	1500 Vac			
	Between input group and output group	500 Vac			
	Between inputs	Not isolated			
Maximum continuous allowed overload (no damage)		13 Vdc	40mA	N/A	
Input filter		Software filter: 0...10 s (per 0.01 s unit)			
Behavior when temperature sensor is broken		N/A		Input value is highest limit value Highest limit flag is ON	
Behavior when external power is off		Input value is 0		Input value is highest limit value	
		The External power supply error status bit in the controller is ON.			

Output Characteristic

Characteristic		Value	
		Voltage Output	Current Output
Output range		0...10Vdc -10...+10Vdc	0...20mA 4...20mA
Load impedance		1kΩ min	300Ω max
Application load type		Resistive load	
Setting time		1ms	
Max accuracy at ambient 25 °C (77 °F)		±0.2 % of full scale	
Temperature drift		±0.01 % of full scale	
Repeatability after stabilization time		±0.4 % of full scale	
Nonlinearity		±0.2 % of full scale	
Output ripple		20 mV max	
Overshoot		0%	
Maximum output deviation		±1.0 % of full scale	
Resolution		12 bits (4096 points)	
Input value of LSB		2.44mV (range 0...10 Vdc) 2.88mV (range –10...+10 Vdc)	4.88μA (range 0...20 mA) 3.91μA (range 4...20 mA)
Data type in application program		0...4095 (range 0...10 Vdc) –2048...+2047(range –10...+10 Vdc)	0...4095
		Scalable from –32768 to 32767	
Input data out of range detection		Yes	
Noise resistance	Maximum temporary deviation during perturbations	±4 % maximum when EMC perturbation is applied to the power and I/O wiring	
	Cable	Twisted pair shielded cable, max 30 m	
	Crosstalk	1LSB max	
Isolation	Between output and internal logic	1500 Vac	
	Between input group and output group	500 Vac	
Output protection		Short- circuit protection	Open- circuit protection
Behavior when external power is off		The External power supply error status bit in the controller is ON.	

Dimension & Wiring Diagram

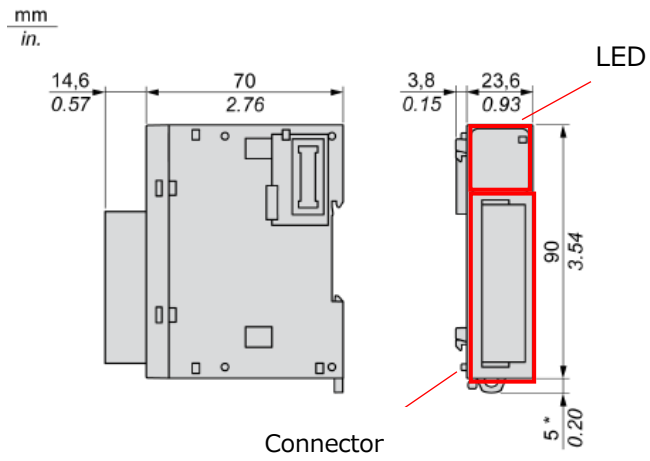

LED

Color	Green
Status LED	
On: Activated Off: Disactivated	

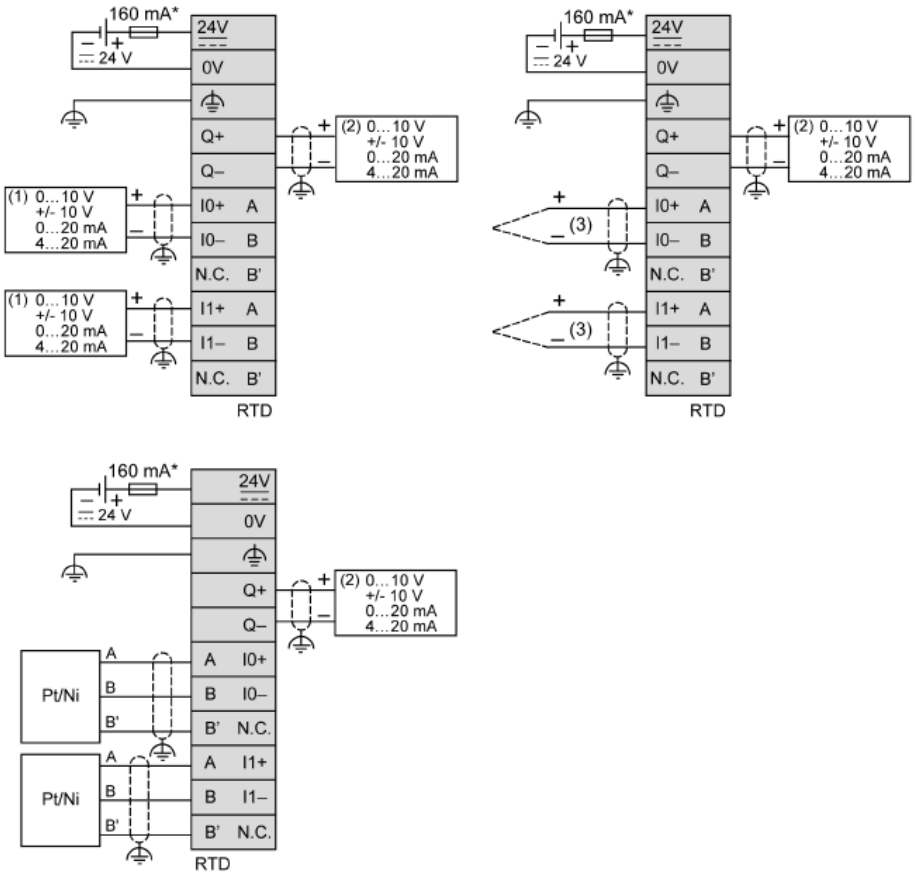

* Type T fuse

(1) Current/Voltage analog output device

(2) Current/Voltage analog input device

(3) Thermocouple

Do not connect wires to unused terminals and/or terminals indicated as “No Connection (N.C.)”.

10.6.5 TM3AM6 /TM3AM6G

TM3AM6 / TM2AM6G: 4-point Analog Input/2-point Analog Output Module

Characteristic	Value
Removable screw terminal block	TM3AM6
Removable spring terminal block	TM3AM6G

Characteristic	Value			
Number of channels	4 input		2 output	
Rated power supply	24V dc			
Signal type	Voltage	Current	Voltage	Current
Input range	0 ... 10Vdc -10...+10Vdc	0...20 mA 4...20 mA	0 ... 10Vdc -10...+10Vdc	0...20 mA 4...20 mA
Resolution max	12 bits, or 11 bits + sign			

General Characteristics

Characteristic	Value
Rated power supply voltage	24 Vdc
Power supply range	20.4...28.8 Vdc
Connector insertion/removal durability	100 times minimum
Current draw on 5 Vdc internal bus	40 mA (all outputs on) 50 mA (all outputs off)
Current draw on 24 Vdc internal bus	0 mA
Current draw on external 24 Vdc	55 mA (all outputs on) 100 mA (all outputs off)

Input Characteristics

Characteristic		Value	
Signal type		Voltage input	Current input
Input range		0...10Vdc -10...+10Vdc	0...20 mA 4...20 mA
Input range		1MΩ min	50Ωmax
Sample duration time		Software configurable: 1 ms or 10 ms per channel	
Input type		Single-ended input.	
Operation mode		Self-scan	
Conversion mode		Sigma delta ADC	
Max accuracy at ambient 25 °C (77 °F)		±0.2 % of full scale	
Temperature drift		±0.01 % of full scale	
Repeatability after stabilization time		±0.5 % of full scale	
Nonlinearity		±0.2 % of full scale	
Maximum input deviation		±1.0 % of full scale	
Resolution		12 bits (4096 points)	
Input value of LSB		2.44 mV (range 0...10 Vdc) 4.88 mV (range –10...+10 Vdc)	4.88 µA (range 0...20 mA) 3.91 µA (range 4...20 mA)
Data type in application program		Scalable from –32768 to 32767	
Input data out of range detection		Yes	
Noise resistance	Maximum temporary deviation during perturbations	±4 % maximum when EMC perturbation is applied to the power and I/O wiring	
	Cable	Twisted pair shielded cable, max 30 m	
	Crosstalk	1LSB max	
Isolation	Between output and internal logic	1500 Vac	
	Between input group and output group	500 Vac	
	Between inputs	Not isolated	
Maximum continuous allowed overload (no damage)		13 Vdc	40mA
Input filter		Software filter: 0...10 s (per 0.01 s unit)	
Behavior when external power is off		Input value is 0 The External power supply error status bit in the controller is ON.	

Output Characteristics

Characteristic		Value	
		Voltage Output	Current Output
Output range		0...10Vdc -10...+10Vdc	0...20mA 4...20mA
Load impedance		1kΩ min	300Ω max
Application load type		Resistive load	
Setting time		1ms	
Max accuracy at ambient 25 °C (77 °F)		±0.2 % of full scale	
Temperature drift		±0.01 % of full scale	
Repeatability after stabilization time		±0.4 % of full scale	
Nonlinearity		±0.2 % of full scale	
Output ripple		20 mV max	
Overshoot		0%	
Maximum output deviation		±1.0 % of full scale	
Resolution		12 bits (4096 points)	
Input value of LSB		2.44mV (range 0...10 Vdc) 2.88mV (range –10...+10 Vdc)	4.88μA (range 0...20 mA) 3.91μA (range 4...20 mA)
Data type in application program		0...4095 (range 0...10 Vdc) –2048...+2047 (range –10...+10 Vdc)	0...4095
		Scalable from –32768 to 32767	
Input data out of range detection		Yes	
Noise resistance	Maximum temporary deviation during perturbations	±4 % maximum when EMC perturbation is applied to the power and I/O wiring	
	Cable	Twisted pair shielded cable, max 30 m	
	Crosstalk	1LSB max	
Isolation	Between output and internal logic	1500 Vac	
	Between input group and output group	500 Vac	
Output protection		Short- circuit protection	Open- circuit protection
Behavior when external power is off		The External power supply error status bit in the controller is ON.	

Dimension & Wiring Diagram

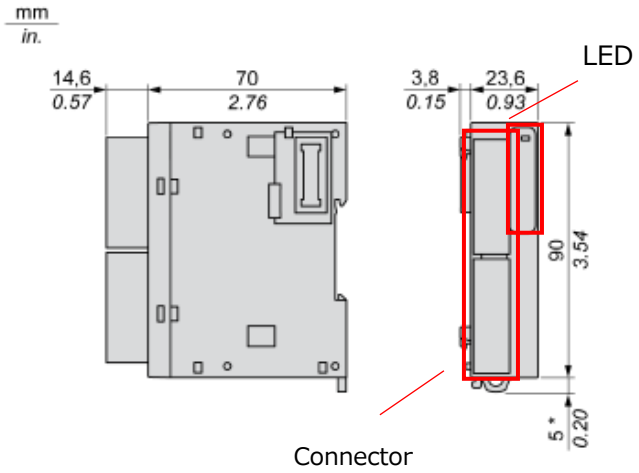

LED

Color	Green
Status LED	
On: Activated Off: Disactivated	

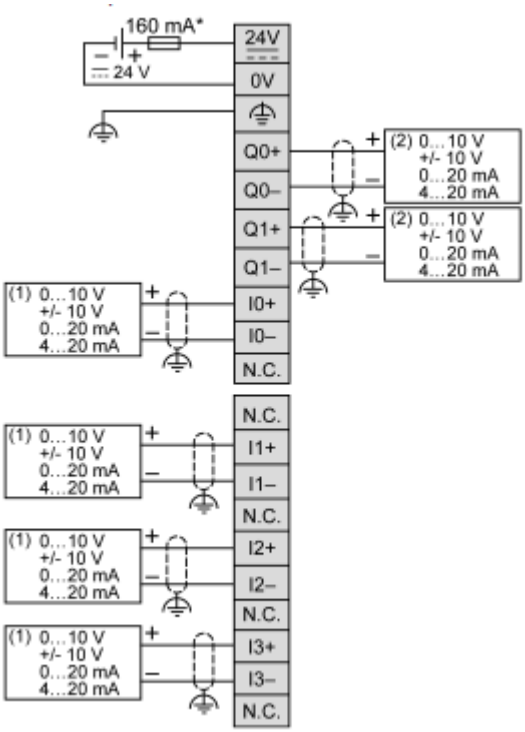

* Type T fuse

(1) Current/Voltage analog output device

(2) Current/Voltage analog input device

Do not connect wires to unused terminals and/or terminals indicated as “No Connection (N.C.)”.