REV	DESCRIPTION	BY	DATE								
–	----	--	--/--/--	–	----	--	--/--/--	–	----	--	--/--/--
				–	----	--	--/--/--	–	----	--	--/--/--

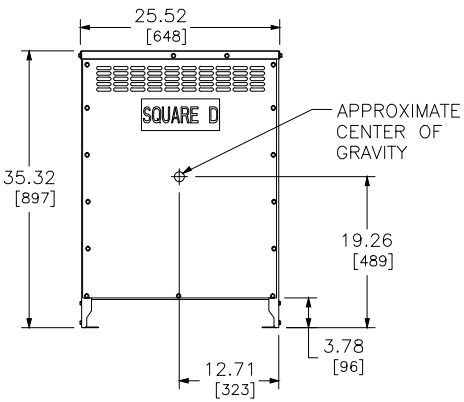

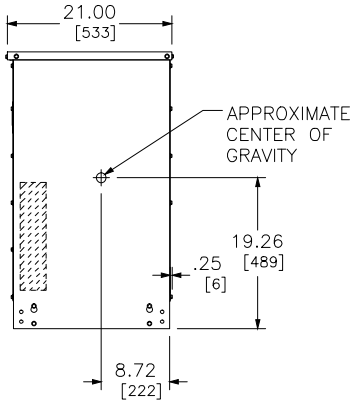

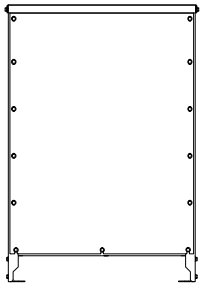

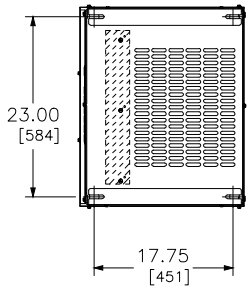

SEISMIC QUALIFICATION
TO BE COMPLIANT WITH THE SEISMIC REQUIREMENTS OF ASCE/SEI 7,
THIS UNIT IS SELF CERTIFIED TO ICS ES AC156 BY SHAKE TABLE QUALIFICATION TESTING
THE ENCLOSURE ABOVE IS 18K.

NOTES:
UL LISTED TO UL1561, FILE NUMBER E6868
NEMA ST-20 (2014) ROUTINE TESTS ARE COMPLETED ON ALL UNITS.
MANUFACTURED IN ISO9001 FACILITIES
GREEN PREMIUM (RoHS/REACH COMPLIANT, PRODUCT ENVIRONMENTAL PROFILE)
REGISTERED TO DOE VIA 10 CFR 429
MINIMUM SIDE AND REAR CLEARANCE 1/2 INCH PER UL1561 ALCOVE TESTING.
FRONT ACCESS MUST COMPLY WITH NEC WORK SPACE REQUIREMENTS.
WIRE ACCESS SHOWN SHADED ABOVE. LOCATIONS ARE FRONT SIDES AND FRONT BOTTOM.

TRANSFORMER SPECIFICATION
30kVA 3 PHASE 60 HERTZ
PRIMARY VOLTAGE: 208V Delta, 3 – 5% 1+2– Taps
SECONDARY VOLTAGE: 240V Delta
150 Deg C RISE ABOVE 40 Deg C AMBIENT
220 Deg C INSULATION SYSTEM Aluminum WINDING
MAXIMUM WEIGHT: 414 LBS
Type 1 UL 250 Paint Process ANSI 49 Grey – Standard
MINIMUM EFFICIENCY 98.23% @ 35% LOADING 75 Deg C
COMPLYING WITH 10 CFR 431 (78 FR 23335–APRIL 18, 2013)

ENGLISH DIMENSIONS: INCHES

EX30T3008H

JOB NAME:	Test	EQUIPMENT DESIGNATION:	Test
JOB LOCATION:		EQUIPMENT TYPE:	LV DISTRIBUTION TRANSFORMER
DRAWN BY:	(MktgTest)	DRAWING TYPE:	ELEVATION VIEW
ENGR:			[redacted]
DATE:	December 04 2015		
DRAWING STATUS:	QUOTE NOT FOR CONSTRUCTION	DWG#	FEX30T3008H–001–01 PG 1 OF 1 REV –